Clamp-On Meter
Models 500, 501, 502 & 503

The AEMC® Models 500, 501, 502 and 503 are compact, professional clamp-on meters that measure up to the toughest standards. They are built into a rugged mechanical case and are designed using quality polycarbonate materials. These meters offer a complete set of measurement ranges and are in compliance with international safety and quality standards to ensure a professional and reliable measuring tool.

These reliable meters are simple to operate and are Auto-Ranging — always providing the optimum measurement range and resolution. They all measure 400A$_{AC}$, 600V$_{AC}$, 600V$_{DC}$, Resistance, and Continuity (with beeper). The Models 501 and 502 also add a Frequency function sensed from either current or voltage. The Models 501 and 503 are average sensing for traditional load environments. The Model 502 is a True RMS clamp-on that provides RMS measurements for today's non-linear electrical environments, such as variable speed drives or computers. The Model 503 is a Hall Effect clamp-on that provides both DC and AC current measurements to 400A.

The Models 500, 501, 502 and 503 are compact for comfortable one-handed operation. The tapered, hooked jaw design facilitates maneuvering in crowded wiring and breaker panels, making it easy to select conductors. The jaw opening accommodates a 500MCM cable. The large and easy-to-read 4000-count LCD features comprehensive user information symbols, such as low battery, polarity, overload and an analog bargraph for easy trend readings. All models are equipped with a Data Hold function that freezes the measurement for later viewing.

They include a padded carrying pouch with leads, batteries and user manual — ready to go!

Features

- Compact size — fits into your pocket
- 400A$_{AC}$ or 400A$_{AC/DC}$ current measurements
- 600V$_{AC/DC}$ volts measurements
- TRMS measurements (Model 502)
- Resistance measurements to 400Ω
- Continuity with beeper below 40Ω
- Frequency measurements (Models 501 and 502) from V and A
- Hold function to “freeze” readings
- Push-button for easy A$_{DC}$ zeroing (Model 503)
- Large, easy-to-read 4000-count display
- 42-segment analog bargraph
- Includes test leads and soft carrying pouch

Applications

- Industrial, commercial, HVAC and residential troubleshooting
- Power panel, junction box and battery bank monitoring
- Electrical testing and troubleshooting on traditional and non-linear loads, such as adjustable speed drives and computers

Specifications

MODELS	500 (Average Sensing)	501 (Average Sensing)	502 (TRMS)	503 (Average Sensing)
AC AMPERES (Auto-Ranging)				
Measurement Range	0.05 to 400A	0.05 to 400A	0.05 to 400Arms	0.05 to 400A
Resolution 40A	0.01A	0.01A	0.01A	0.01A
400A	0.1A	0.1A	0.1A	0.1A
Accuracy 50 to 60Hz	±2% of Reading ± 5cts	±1.9% of Reading ± 5cts	±1.9% of Reading ± 5cts	±1.5% of Reading ± 10cts
60 to 500Hz	±2.8% of Reading ± 5cts	±2.5% of Reading ± 5cts	±2.5% of Reading ± 5cts	±2.5% of Reading ± 10cts
Overload Protection	600Arms	600Arms	600Arms	600Arms
AC VOLTS (Auto-Ranging)				
Measurement Range	0.5 to 600V	0.5 to 600V	0.5 to 600Vrms	0.5 to 600V
Resolution 400V	0.1V	0.1V	0.1V	0.1V
600V	1V	1V	1V	1V
Accuracy 50 to 60Hz	±1% of Reading ± 5cts	±0.8% of Reading ± 5cts	±1.5% of Reading ± 5cts	±0.8% of Reading ± 5cts
60 to 500Hz	±1.5% of Reading ± 5cts	±1.5% of Reading ± 5cts	±1.5% of Reading ± 5cts	±1.5% of Reading ± 5cts
Input Impedance	1MΩ	1MΩ	1MΩ	10MΩ
Overload Protection	600Vrms	600Vrms	600Vrms	600Vrms
DC AMPERES (Auto-Ranging)				
Measurement Range	–	–	–	0.10 to 400A
Resolution 40A	–	–	–	0.01A
400A	–	–	–	0.1A
Accuracy	–	–	–	±2.5% of Reading ± 10cts
Overload Protection	–	–	–	600Arms
DC VOLTS (Auto-Ranging)				
Measurement Range	–	0.2 to 600V	0.2 to 600V	0.2 to 600V
Resolution 400V	–	0.1V	0.1V	0.1V
600V	–	1V	1V	1V
Accuracy	–	±1% of Reading ± 2cts	±1% of Reading ± 2cts	±1% of Reading ± 2cts
Input Impedance	–	1MΩ	1MΩ	10MΩ
Overload Protection	–	600Vrms	600Vrms	600Vrms
RESISTANCE-OHMS (Ω)				
Measurement Range	0.3 to 400Ω	0.2 to 400Ω	0.2 to 400Ω	0.2 to 400Ω
Resolution	0.1Ω	0.1Ω	0.1Ω	0.1Ω
Accuracy	±1.9% of Reading ± 3cts	±1% of Reading ± 2cts	±1% of Reading ± 2cts	±1% of Reading ± 2cts
Max Test Voltage	1.5VDC	1.5VDC	1.5VDC	1.5VDC
Overload Protection	600Vrms	600Vrms	600Vrms	600Vrms
CONTINUITY •))				
Beeper Activation	<35Ω	<40Ω	<40Ω	<40Ω
Max. Test Voltage	1.5VDC	1.5VDC	1.5VDC	1.5VDC
Overload Protection	600Vrms	600Vrms	600Vrms	600Vrms
FREQUENCY (Hz) (Auto-Ranging)				
CURRENT INPUT				
Range 20Hz to 4kHz	–	1Hz Resolution	1Hz Resolution	–
>4kHz to 10kHz	–	10Hz Resolution	10Hz Resolution	–
Accuracy	–	±0.1% of Reading ± 1ct	±0.1% of Reading ± 1ct	–
Min Input Signal	–	2Arms	2Arms	–
Input Impedance	–	1MΩ	1MΩ	–
Overload Protection	–	600Arms	600Arms	–
VOLTAGE INPUT				
Range 10Hz to 4kHz	–	1Hz Resolution	1Hz Resolution	–
>4kHz to 40kHz	–	10Hz Resolution	10Hz Resolution	–
>40kHz to 400kHz	–	100Hz Resolution	100Hz Resolution	–
Accuracy	–	±0.1% of Reading ± 1ct	±0.1% of Reading ± 1ct	–
Min Input Signal 4kHz	–	5Vrms	5Vrms	–
40kHz	–	5Vrms	5Vrms	–
400kHz	–	5Vrms	5Vrms	–
Input Impedance	–	1MΩ	1MΩ	–
Overload Protection	–	600Vrms	600Vrms	–

Specifications

MODELS	500 (Average Sensing)	501 (Average Sensing)	502 (TRMS)	503 (Average Sensing)
GENERAL				
Digital Display	3¾ digits LCD display, 4000-count (max. reading 3999)			
Analog Display	Fast 42-segment analog bargraph display			
Symbol & Scale Range	Automatic according to range and input signal			
Polarity	▬ Displayed when negative signal applied to input			
Overload	OL Displayed when input signal exceeds range			
Sample Rate	2 samples/sec for the digital display, 20 samples/sec for the analog bargraph			
Power Source	Two 1.5V AAA batteries			
Auto-Off	30 minutes			
Low Power Indication	Displayed when the battery is below the required voltage			
Jaw Opening Size Ø	1.1" (28mm) – faciliates 500MCM cable			
Dimension	7.60 x 1.97 x 1.1" (193 x 50 x 28mm)			
Weight	8.11 oz (230g) with batteries			
ENVIRONMENTAL				
Altitude	2167 ft (2000m) max.			
Operating Temperature	32° to 104°F (0° to 40°C), <80% RH, non-condensing			
Storage Temperature	14° to 140°F (-10° to 60°C), <70% RH, battery removed			
Pollution Degree	2			
SAFETY				
Safety Rating	EN 61010, 600V Cat. II, EN 61010, 300V Cat. III			
Double Insulation ⧈	Yes			
CE Mark	Yes			

Construction

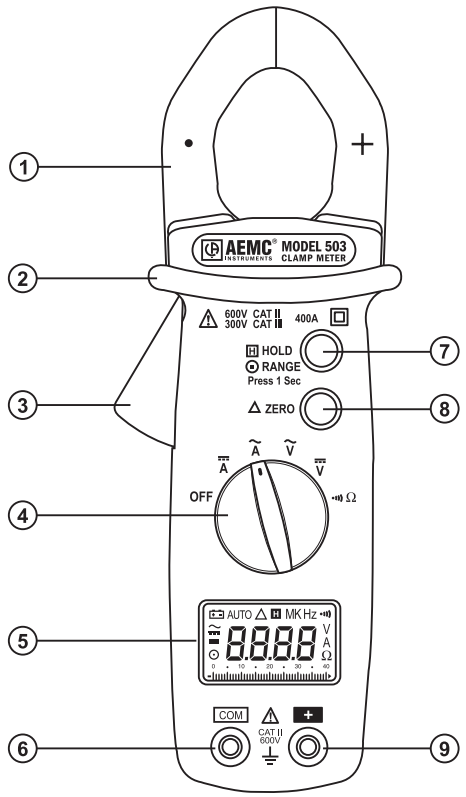

Function	Model 500	Model 501	Model 502	Model 503
TRMS	–	–	✓	–
400A AC	✓	✓	✓	✓
400A DC	–	–	–	✓
600V AC	✓	✓	✓	✓
600V DC	–	✓	✓	✓
Resistance	✓	✓	✓	✓
Continuity	✓	✓	✓	✓
Beeper	✓	✓	✓	✓
Frequency	–	✓	✓	–
Bargraph	✓	✓	✓	✓
Hold	✓	✓	✓	✓
Push button DC Zero	–	–	–	✓

1. Jaw assembly
2. Safety barrier – anti-slip guard
3. Lever for jaw opening/ closing
4. Rotary range selector switch
5. LCD display with bargraph
6. COM (Black) – input jack
7. Positive (Red) + input jack
8. DC zero button (Blue) (Model 503 only)
9. Jaw assembly

Selection Chart

MODEL	500	501	502	503
Catalog No.	2117.54	2117.21	2117.66	2117.22
Type	AC	AC	AC TRMS	AC/DC
AC Current	0.05 to 400A	0.05 to 400A	0.05 to 400A	0.05 to 400A
AC Voltage	0.5 to 600V	0.5 to 600V	0.5 to 600V	0.5 to 600V
DC Current	–	–	–	0.10 to 400A
DC Voltage	–	0.2 to 600V	0.2 to 600V	0.2 to 600V
Resistance (Ω)	400Ω	400Ω	400Ω	400Ω
Continuity	<35Ω	<40Ω	<40Ω	<40Ω
Frequency (Hz) Current Voltage	 – –	 20Hz to 10kHz 10Hz to 400kHz	 20Hz to 10kHz 10Hz to 400kHz	 – –
True RMS	–	–	Yes	–
Jaw Size	1.1" (28mm)	1.1" (28mm)	1.1" (28mm)	1.1" (28mm)
Dimension	7.60 x 1.97 x 1.1" 193 x 50 x 28mm	7.60 x 1.97 x 1.1" 193 x 50 x 28mm	7.60 x 1.97 x 1.1" 193 x 50 x 28mm	7.60 x 1.97 x 1.1" 193 x 50 x 28mm

Models 500, 501, 502 & 503 include a pair of test leads and soft carrying case

ORDERING INFORMATION — CATALOG NO.

Clamp-on Meter Model 500 (AC, 400AAC, 600VAC, Ohms, Continuity) . . . . . **Cat. #2117.54**

Clamp-on Meter Model 501 (AC, 400AAC, 600VAC/DC, Ohms, Continuity) . . . . . **Cat. #2117.21**

Clamp-on Meter Model 502 (TRMS, 400AAC, 600VAC/DC, Ohms, Continuity) . . . . . **Cat. #2117.66**

Clamp-on Meter Model 503 (AC/DC, 400AAC/DC, 600VAC/DC, Ohms, Continuity) . . . . . **Cat. #2117.22**

All clamp-on meters are supplied with a pair of test leads (red/black with probe tips), batteries, soft carrying case and a user manual

Contact Us

United States & Canada:

Chauvin Arnoux®, Inc.
d.b.a. AEMC® Instruments
200 Foxborough Blvd.
Foxborough, MA 02035 USA
(508) 698-2115 • Fax (508) 698-2118
www.aemc.com

Customer Support – for placing an order, obtaining price & delivery:
customerservice@aemc.com

Sales Department – for general sales information:
sales@aemc.com

Repair and Calibration Service – for information on repair & calibration, obtaining a user manual:
repair@aemc.com

Technical and Product Application Support – for technical and application support:
techinfo@aemc.com

Webmaster – for information regarding www.aemc.com:
webmaster@aemc.com

South America, Central America, Mexico, Caribbean, Australia & New Zealand:

Chauvin Arnoux®, Inc.
d.b.a. AEMC® Instruments
15 Faraday Drive
Dover, NH 03820 USA
(978) 526-7667 • Fax (978) 526-7605
export@aemc.com
www.aemc.com

All other countries:

Chauvin Arnoux SCA
190, rue Championnet
75876 Paris Cedex 18, France
33 1 44 85 45 28 • Fax 33 1 46 27 73 89
info@chauvin-arnoux.com
www.chauvin-arnoux.com