Valve Product Solutions

The Instrumentation Company

NOSHOK INCORPORATED

Needle Valves

Manifold Valves

- 2-Valve Static Pressure & Liquid Level
- 3-Valve Differential Pressure
- 5-Valve Natural Gas

Accessories

At NOSHOK, we pride ourselves on being innovators in the industry by continually offering the latest technology and measurement solutions, and providing the best customer support in the marketplace.

Established in 1967, NOSHOK was one of the first companies to offer liquid filled pressure gauges. We also took a bold step by backing our quality gauges with an extended three year warranty. That unwavering standard of quality has endured for over 45 years, and as we have expanded our product offering we continue to provide industry-leading warranties. NOSHOK also leads the industry as one of the first companies to offer corrosion-resistant zinc-nickel plating standard on our carbon steel valves.

We have the capacity to put together special requirements which are so often hard to find. If you do not find what you need in this catalog, chances are we can still put a solution together.

NOSHOK is committed to providing excellence on every level. Thank you for choosing NOSHOK Products.

Jeff N. Scott
President

NOSHOK Corporate Headquarters
Your Single Source Instrumentation Company

NOSHOK is a member of, and actively supports:

FCI Fluid Controls Institute, Inc. · THE FPDA MOTION & CONTROL NETWORK · ASME SETTING THE STANDARD · ASSOCIATION FOR HIGH TECHNOLOGY DISTRIBUTION AHTD

NOSHOK is an ISO 9001:2008 registered company.

WARRANTY INFORMATION

NOSHOK's **Three Year Warranty** applies to all needle and manifold valves. ***NOSHOK guarantees all products*** to be free from defects in material and workmanship, to remain within catalogued accuracy specifications, and to operate within the catalogued performance specifications. These products must be operated within the catalogued environmental and application parameters. Determination of failure will be made by NOSHOK, Inc.'s equipment and personnel or a certified test facility specializing in this type of evaluation.

THE NOSHOK ADVANTAGE

NOSHOK VALVES PATENTED FOR SUPERIOR DESIGN

NOSHOK has been awarded a patent for our innovative valve design, which features a unique body-to-bonnet, metal-to-metal seal that significantly increases the pressure range of the valve without compromising the flow coefficient. This design also helps maintain the integrity of the bonnet threads by segregating them from the process media. (Patent No. US 7,758,014)

The body seal incorporates a dovetail undercut below the seal that improves the metal-to-metal contact forces as pressures increase, as well as a dual outlet orifice to maximize fluid flow. These novel design features increase the pressure limits of the valve to 10,000 psi, which is significantly higher than similar sized miniature needle valves.

NOSHOK valves are built for maximum durability and performance in the toughest applications. They are also available with zinc-nickel plating, which provides one of the highest levels of corrosion resistance available on the market today. All NOSHOK valves are 100% helium leak tested to 1 x 10^{-4} ml/s for guaranteed performance and reliability.

NOSHOK valves that incorporate this patented design include our 100 Series hard seat mini valves, 800/850 Series bleed valves, all 2-valve block and bleed valves along with 5-valve manifolds. Watch the video on this patented valve design by scanning the QR code below.

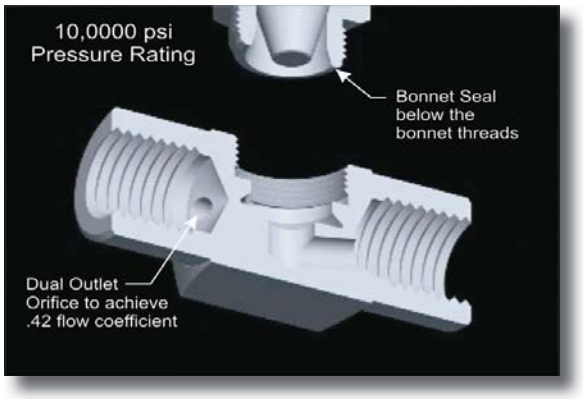

SUPERIOR CORROSION-RESISTANT ZINC-NICKEL PLATING ON ALL CARBON STEEL NOSHOK VALVES

A significant number of high profile international aerospace and automotive companies have made the switch to zinc-nickel plating for their components over the last decade, so we decided to put this plating to the test for ourselves.

In a certified test by an independent lab, two samples were subjected to 1,000+ hours of exposure to a 5% salt spray (fog) environment in a test chamber operated and maintained in accordance with ASTM B-117-07a. **The zinc-nickel plated sample showed no visible corrosion on the part after 1,000+ hours of exposure.** Internal tests yielded the same results after being submerged for 3,500 hours in a 10% salt solution. The zinc-nickel plated valves far outperformed the electroless nickel and cobalt plated valves in terms of corrosion resistance. Because of these impressive results, all carbon steel NOSHOK needle and manifold valves now utilize this material as standard plating to withstand and endure in the harshest environments.

Improvements in corrosion protection have become increasingly important for outdoor applications, where traditional platings have limited performance capabilities. In addition to its excellent corrosion resistance (higher than any other sacrificial alloy), zinc-nickel plating provides increased deposit hardness which results in extended wear resistance and longer service life – an ideal quality for most industrial applications. It is also WEEE and RoHS compliant.

Note: Colors may vary due to normal process variation and will not affect the performance of the valve.

The Instrumentation Company
NOSHOK INCORPORATED

TABLE OF CONTENTS

WARRANTY INFORMATION & THE NOSHOK ADVANTAGE

Needle/Manifold Valve Warranties; Patented Design; ZnNi Plating 3

NEEDLE VALVES

Mini, Hard Seat:
100/140 SERIES 6-13

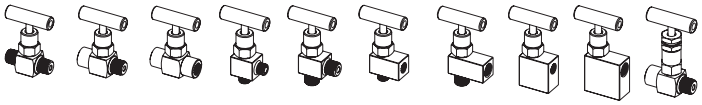

Mini, Soft Tip:
150/190 SERIES 14-21

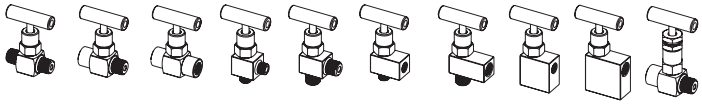

Multiport, Hard Seat:
200 SERIES 22-25

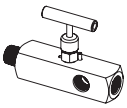

Multiport, Soft Seat:
300 SERIES 26-29

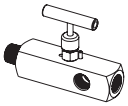

Standard, Hard Seat:
400 SERIES 30-35

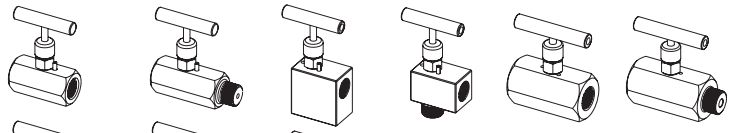

Standard, Soft Seat:
500 SERIES 36-39

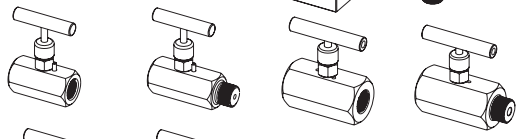

Block & Bleed, Hard Seat:
600 SERIES 40-43

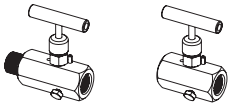

Block & Bleed, Soft Seat:
700 SERIES 44-47

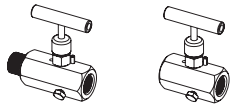

Bleed, Hard Seat & Soft Tip:
800/850 SERIES 48-51

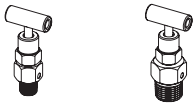

2-Valve Block & Bleed, Hard Seat:
2070 SERIES 52-55

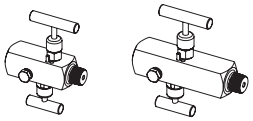

2-Valve Block & Bleed, Soft Seat/Tip:
2170 SERIES 56-59

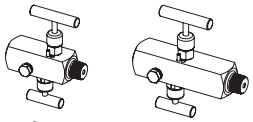

3-Valve Double Block & Bleed, Hard Seat:
3070 SERIES 60-63

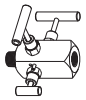

NEEDLE VALVE OPTIONS

Handles, Panel Mounts, Plug, Bleed Plug, Bleed Screw, Packing ... 64-65

Delrin® and Kalrez® are registered trademarks of DuPont™
Grafoil® is a registered trademark of Graftech, Inc.™

TABLE OF CONTENTS

The Instrumentation Company
NOSHOK INCORPORATED

MANIFOLD VALVES, 2-VALVE

Static Pressure Block & Bleed, Hard & Soft Seat:
2000/2100 SERIES 66-71

Liquid Level, Hard & Soft Seat:
2020/2120 SERIES 72-75

Static Pressure Narrow Block & Bleed, Hard & Soft Seat:
200002/210002 SERIES & 200402/210402 SERIES 76-79

Static Pressure Mini Block & Bleed, Hard Seat & Soft Tip (0.141" Orifice):
2602/2702 SERIES 80-83

Static Pressure Block & Bleed, Hard Seat & Soft Tip (0.156" Orifice):
2603/2703 SERIES & 2604/2704 SERIES 84-87

Meter Manifold, Soft Seat:
2180 SERIES 88-91

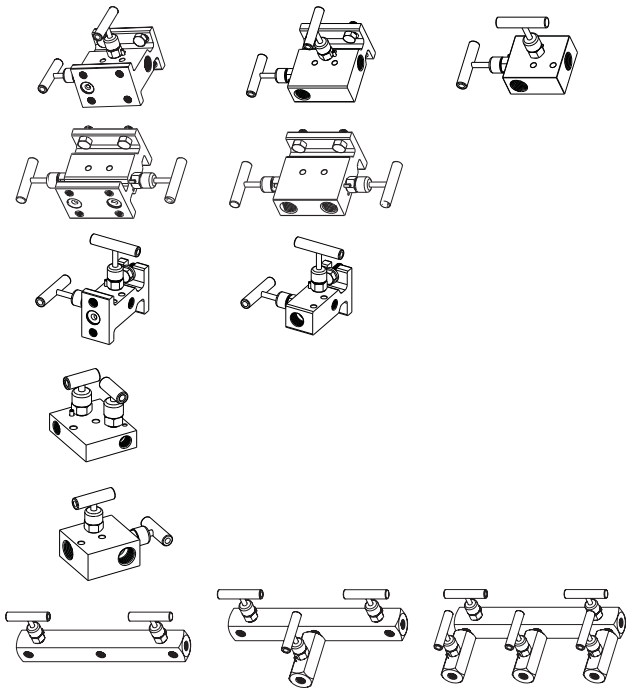

MANIFOLD VALVES, 3-VALVE

Differential Pressure, Hard & Soft Seat:
3010/3110 SERIES 92-97

Differential Pressure, Soft Seat (0.375" Orifice):
3510 SERIES 98-103

Differential Pressure Mini, Hard Seat & Soft Tip (0.141" Orifice):
3610/3710 SERIES 104-107

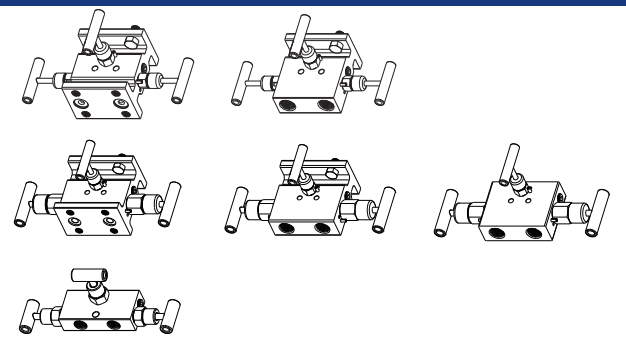

MANIFOLD VALVES, 5-VALVE

Natural Gas, Hard & Soft Seat/Tip:
5030/5130 SERIES 108-113

Natural Gas, Soft Seat/Tip (0.375" Orifice):
5530 SERIES 114-119

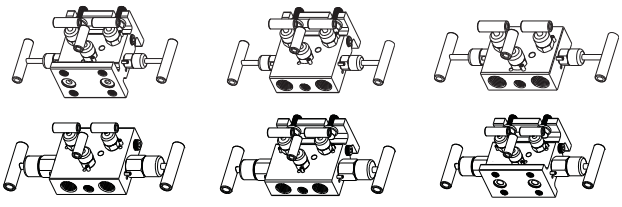

MANIFOLD VALVE ACCESSORIES

Dielectric Kit, Futbols, Manifold Mounting Kit, Δ Pressure to Static Plate, Static Adapters 120-123

MOUNTING DIAGRAMS FOR MANIFOLD VALVES

2000, 3000, & 5000 SERIES 124-125

Needle & Manifold Valve Reference Information 126-129

In keeping with and for purpose of product and/or manufacturing process improvements, NOSHOK, Inc. reserves the right to make design changes without prior notice.

Mini, Hard Seat

100/140 SERIES

- Compact size valve built for maximum durability and robust performance in the toughest applications
- 100% helium leak tested to 1 x 10^{-4} ml/s for guaranteed performance and reliability
- Hard seat valves have a maximum pressure of 10,000 psi for stainless steel and steel models; 6,000 psi for brass
- Available in zinc-nickel plated steel, electropolished stainless steel, and brass
- FKM o-ring seal and PTFE back-up ring below the stem threads to protect from corrosion and galling; PTFE or Grafoil® packing optional
- All stems are 316 stainless steel
- All stem threads are rolled for strength and ease of operation
- Patented body-to-bonnet, metal-to-metal seal is designed to significantly increase the pressure range of the valve **(U.S. Patent 7,758,014)**

SPECIFICATIONS	
Materials	Zinc-nickel plated steel, electropolished 316 stainless steel, 360 brass
Connections	1/8" NPT, 1/4" NPT, 7/16"-20 UNF-2B, 9/16"-18 UNF-2B Male-male, Male-female, Female-female, in-line and angled configurations
Pressure ratings	Brass: 6,000 psi @ 200°F Steel: 10,000 psi @ 200°F Stainless steel: 10,000 psi @ 200°F
Orifice size	0.172"
Flow coefficient	C_V 0.42
Stem seal & type	All 316 stainless steel stems with FKM o-ring and PTFE back-up ring below the threads, PTFE or Grafoil® packing optional
Options	Panel mountings, o-ring materials, handles, packings, regulating stem and stem tips

NOTE: All NOSHOK valve products conform to the MSS SP-99 instrument valves standards, and valves supplied with packing also conform to MSS SP-132 compression packing systems for instrument valves standard.

ORDERING INFORMATION								
SERIES	**1**	100/140 Series, hard seat						
CONNECTION SIZE	**01**	1/8" NPT	**42**	7/16"- 20 UNF-2B				
	02	1/4" NPT	**43**	9/16"- 18 UNF-2B				
VALVE TYPE	**MMB**	Male-Male, Brass	**MMC**	Male-Male, Steel	**MMS**	Male-Male, Stainless Steel		
	MFB	Male-Female, Brass	**MFC**	Male-Female, Steel	**MFS**	Male-Female, Stainless Steel		
	FFB	Female-Female, Brass	**FFC**	Female-Female, Steel	**FFS**	Female-Female, Stainless Steel		
	MMAB	Male-Male Angle, Brass	**MMAC**	Male-Male Angle, Steel	**MMAS**	Male-Male Angle, Stainless Steel		
	MFAB	Male-Female Angle, Brass	**MFAC**	Male-Female Angle, Steel	**MFAS**	Male-Female Angle, Stainless Steel		
	FFAB	Female-Female Angle, Brass	**FFAC**	Female-Female Angle, Steel	**FFAS**	Female-Female Angle, Stainless Steel		

Please consult your local NOSHOK Distributor or NOSHOK, Inc. for availability and delivery information.

EXAMPLE **102 – FFC**

Series .....100/140 hard seat
Connection size ..... 1/4" NPT
Valve type ..... Female-female, steel

To meet all of your specific application requirements, the following additional options are available for these needle valves. To order all or any of these options, simply add them to the part number as shown in the diagram below.

NOTE 1: The example shown includes ALL possible additional options. Please include ONLY the options required for your application when building your part number. (EXAMPLE: 102-MFC-HL3)

NOTE 2: When a packing option is selected, an o-ring option is NOT available.

ORDERING INFORMATION - Additional Options								
PACKINGS	**P1**	PTFE	**P2**	Grafoil®				
STEM TIPS	**T1**	Non-rotating (316 stainless standard)	**T6**	Ball (carbide)	**T8**	Ball (Monel)		
	T5	Ball (440C stainless)	**T7**	Ball (ceramic)	**T9**	Regulating hard		
O-RINGS*	**EM1**	EPDM	**KZ1**	FFKM (Kalrez® 3018 or equivalent)	**NB1**	NBR		
PANEL MOUNTINGS	**PM1**	Panel mount (1 nut)	**PM2**	Panel mount (2 nuts)				
HANDLES	**HL2**	2-1/2" "T"	**HL4**	1-3/8" Phenolic				
	HL3	1" Round knurled	**HL5**	1-3/4" Phenolic				

Please consult your local NOSHOK Distributor or NOSHOK, Inc. for availability and delivery information.

* Other o-ring materials available on request.

Please note that the standard o-ring in all the NOSHOK mini valves is FKM and the standard handles are brass round knurled (HL3) handles, steel mini "T" handles (HL1), and 316SS mini "T" handles (HL1).

The handle material will always match the material of the valve, unless otherwise specified. For example, the round knurled (HL3) on a 102-FFB will be brass. When only the standard configuration is needed, no additional designations are necessary. Please consult the factory for special application requests.

EXAMPLE with Additional Options **102 – FFC – P1 – T1 – PM2 – HL4**

Series..... 100/140 hard seat
Connection size ..... 1/4" NPT
Valve type ..... Female-female, steel
Packing.....PTFE
Stem tip ..... Non-rotating
Panel mount ..... Panel mount (2 nuts)
Handle..... 1-3/8" Phenolic

Dimensions

Male-Male

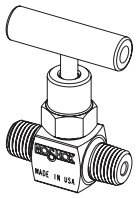

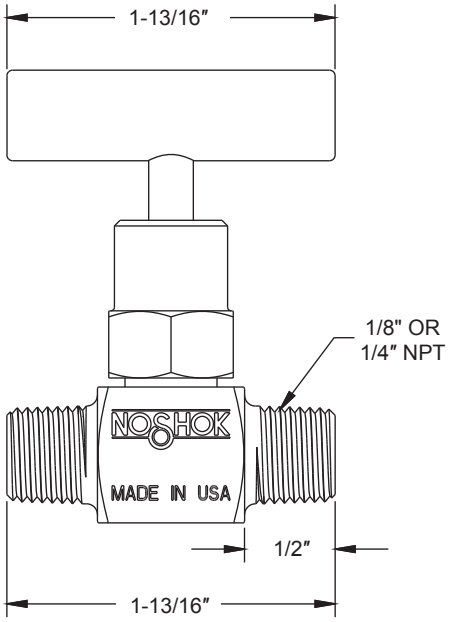

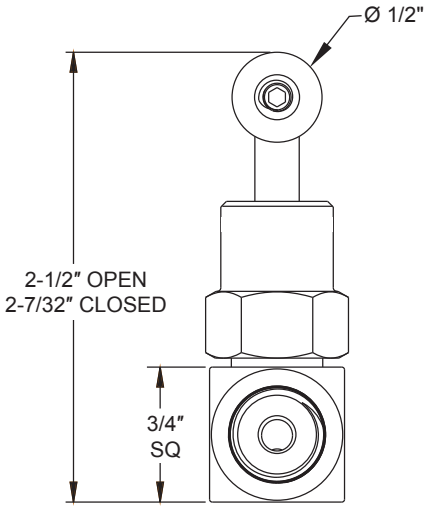

Male-Female

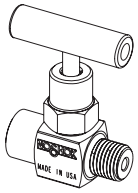

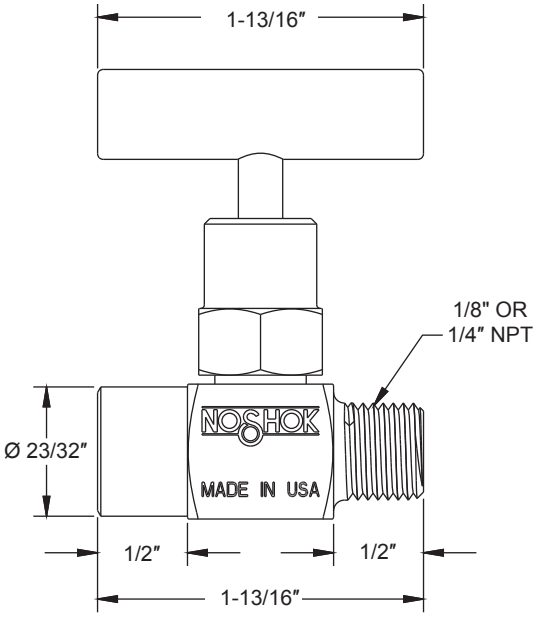

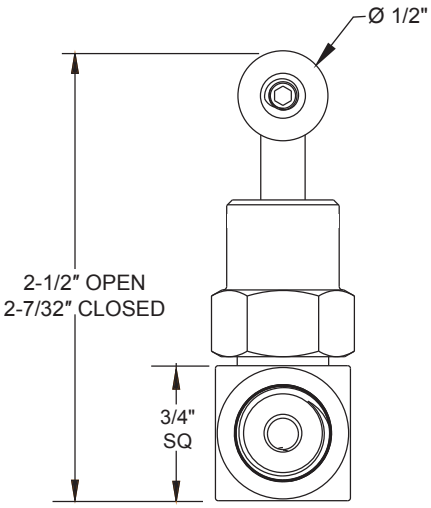

Female-Female

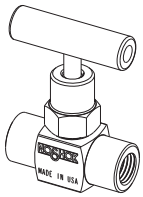

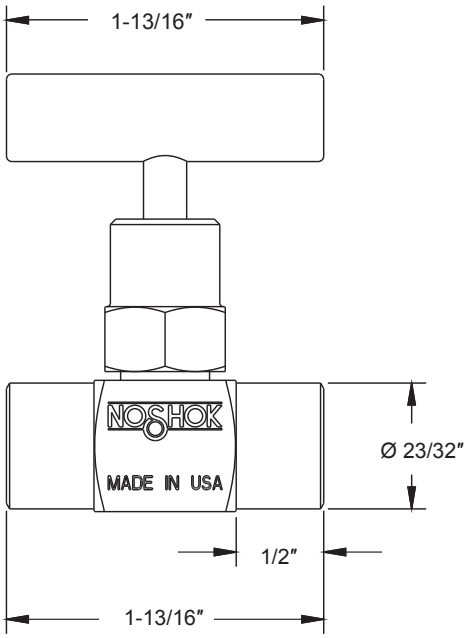

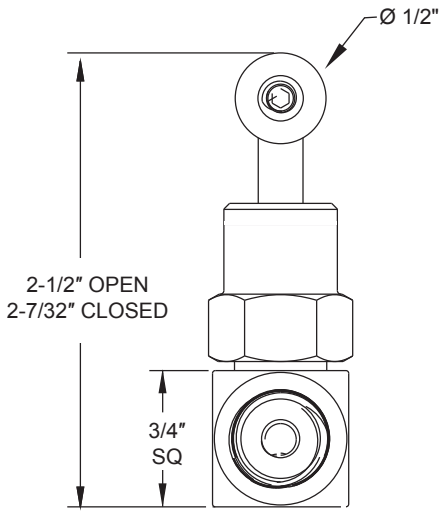

1/8" Male-Male Angle

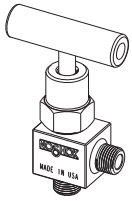

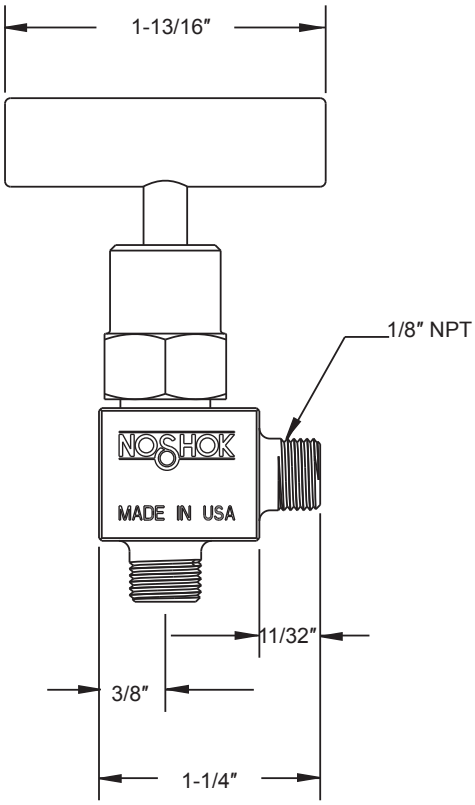

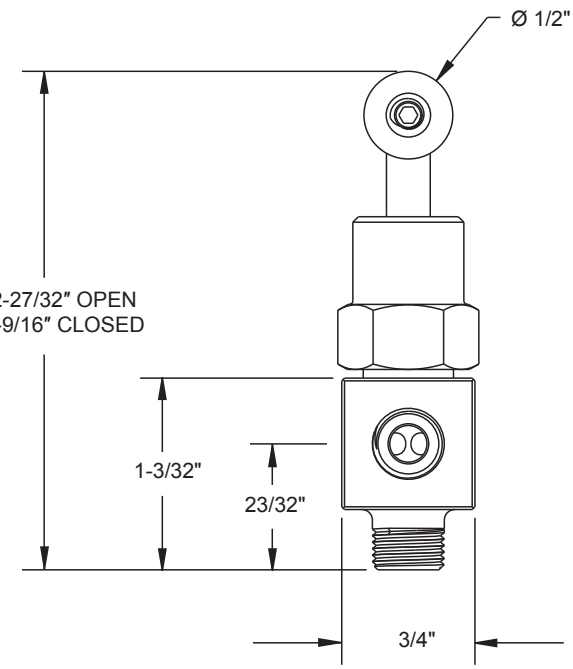

Dimensions

1/4" Male-Male Angle

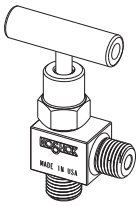

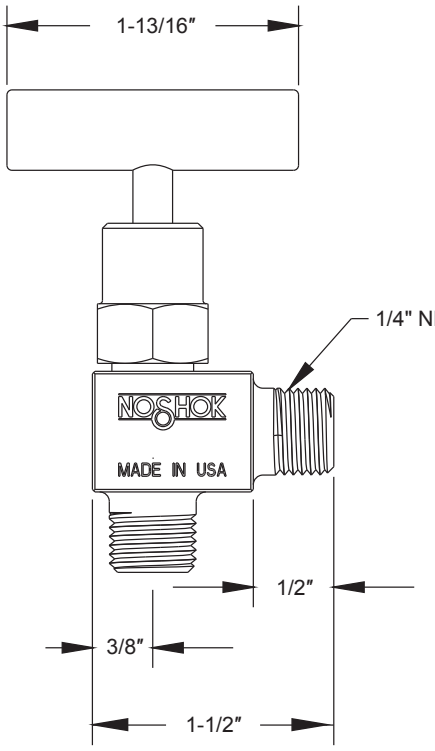

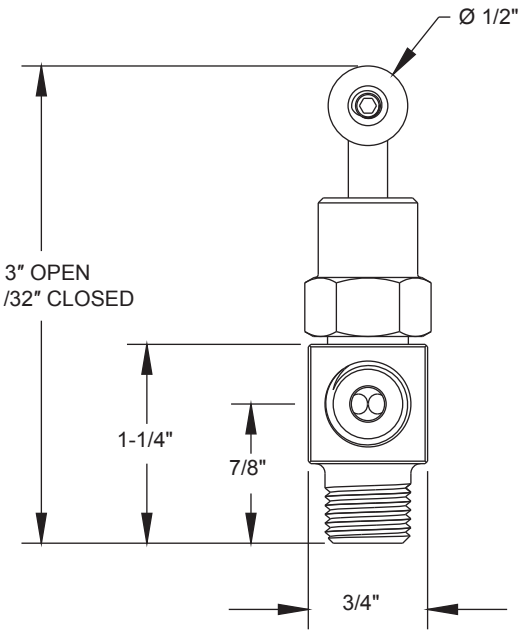

1/8" Male-Female Angle

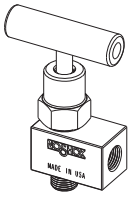

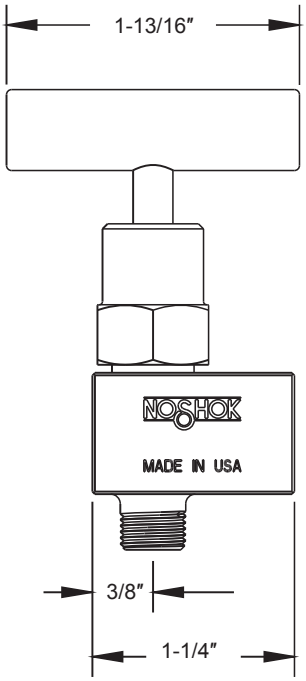

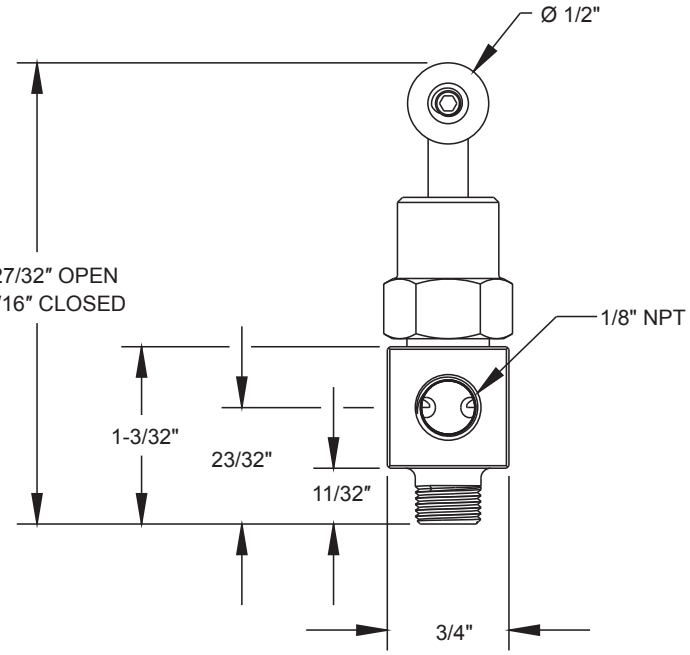

1/4" Male-Female Angle

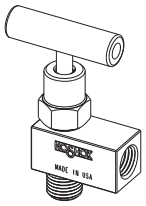

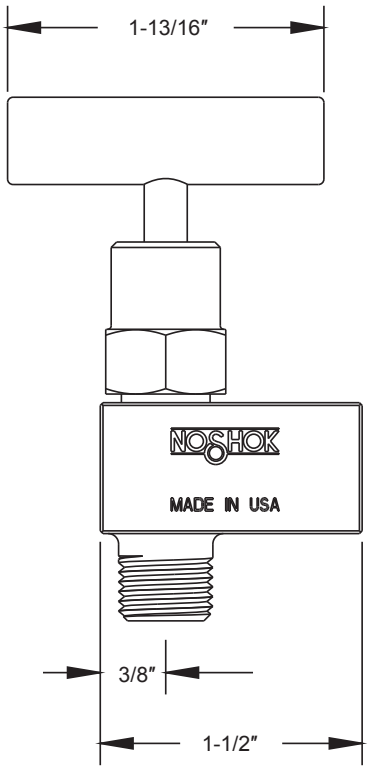

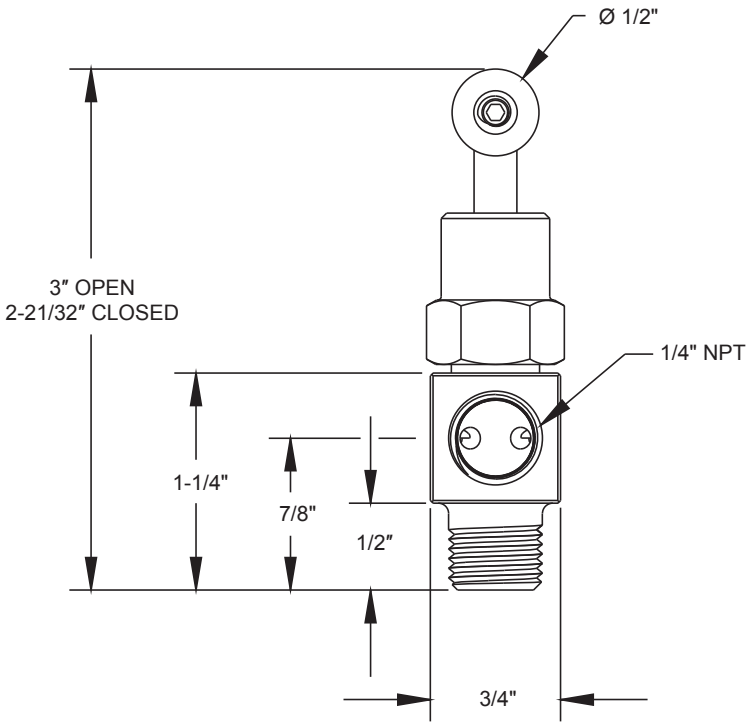

1/8" Female-Female Angle

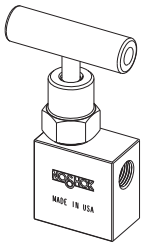

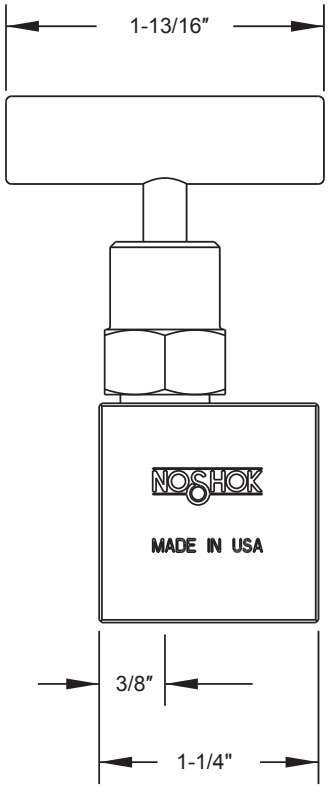

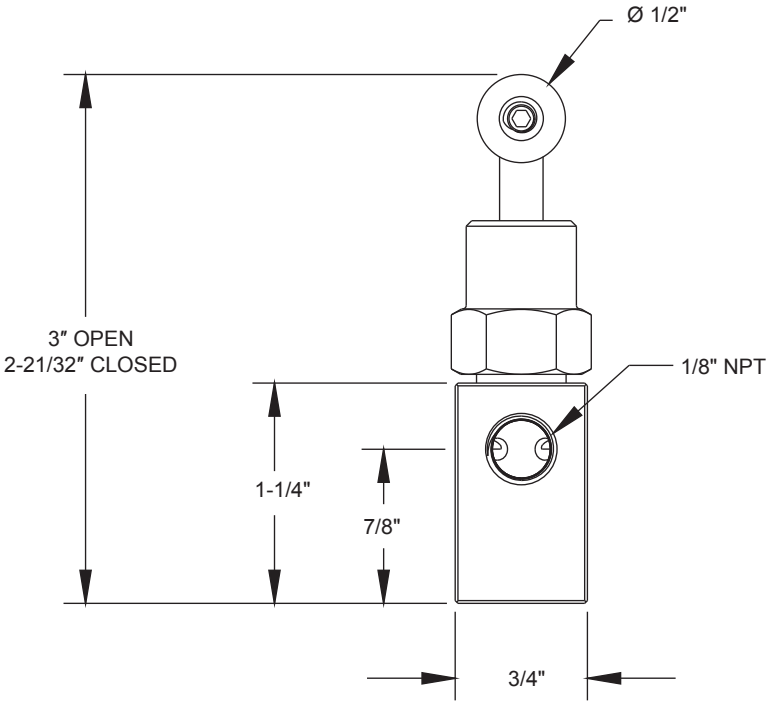

Dimensions

1/4" Female-Female Angle

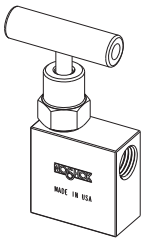

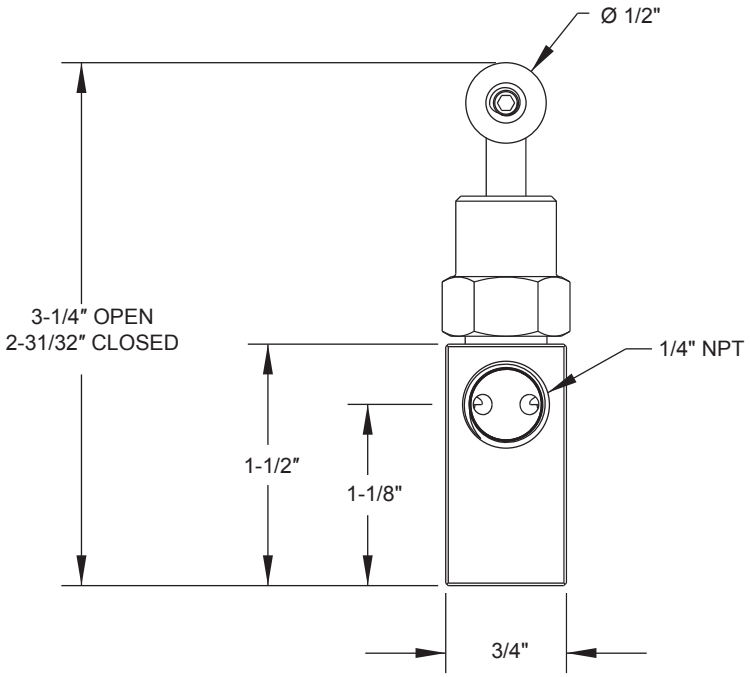

For panel mount and packing dimensions, see pgs. 64-65.

Mini, Hard Seat

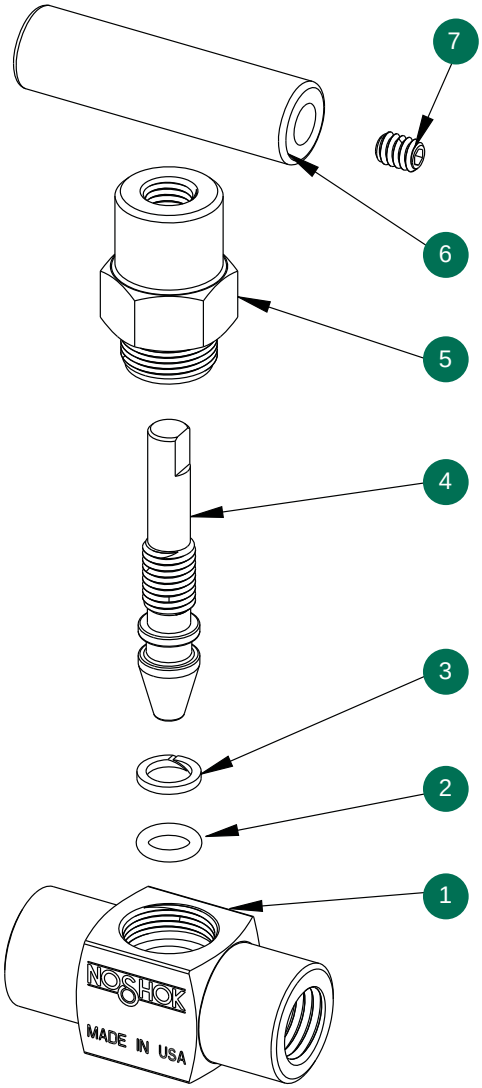

1 Mini valve body
2 FKM o-ring
3 PTFE back-up ring
4 Mini valve stem
5 Mini valve bonnet
6 Mini valve “T” handle
7 Set screw

Option With Packing

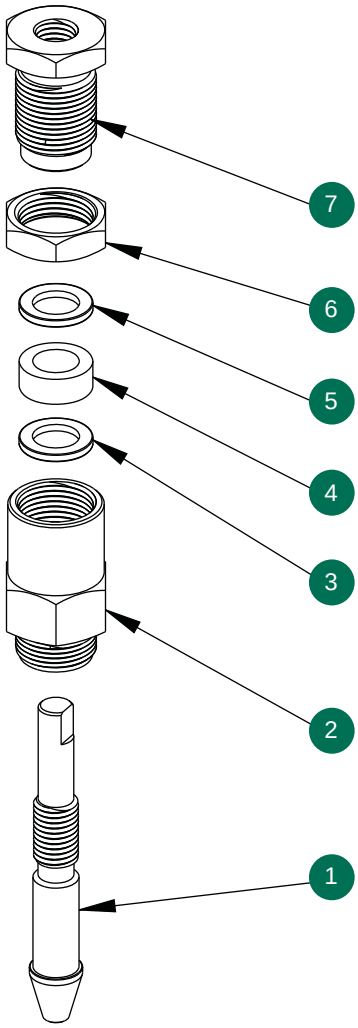

1 Mini valve packing stem
2 Mini valve packing bonnet
3 Packing washer
4 Packing
5 Packing washer
6 Jam nut
7 Packing adjustment screw

Mini, Soft Tip

150/190 SERIES

- Compact size valve built for maximum durability and robust performance in the toughest applications
- 100% helium leak tested to 1 x 10^{-4} ml/s for guaranteed performance and reliability
- Soft tip valves feature a patented Delrin® non-rotating soft tip stem, and a back-up metal-to-metal seal **(U.S. Patent 6,820,857)**
- Maximum pressure of 6,000 psi for stainless steel and steel models; 3,000 psi for brass
- Available in zinc-nickel plated steel, electropolished stainless steel, and brass
- FKM o-ring seal and PTFE back-up ring below the stem threads to protect from corrosion and galling; PTFE packing optional
- All stems are 316 stainless steel
- All stem threads are rolled for strength and ease of operation
- Patented body-to-bonnet, metal-to-metal seal is designed to significantly increase the pressure range of the valve **(U.S. Patent 7,758,014)**

SPECIFICATIONS	
Materials	Zinc-nickel plated steel, electropolished 316 stainless steel, 360 brass
Connections	1/8" NPT, 1/4" NPT, 7/16"-20 UNF-2B, 9/16"-18 UNF-2B Male-male, Male-female, Female-female, in-line and angled configurations
Pressure ratings	Brass: 3,000 psi @ 200°F Steel: 6,000 psi @ 200°F Stainless steel: 6,000 psi @ 200°F
Orifice size	0.172"
Flow coefficient	C_V 0.42
Stem seal & type	All 316 stainless steel stems with FKM o-ring and PTFE back-up ring below the threads, PTFE packing optional
Options	Panel mountings, o-ring materials, handles, packings, regulating stem and stem tips

NOTE: All NOSHOK valve products conform to the MSS SP-99 instrument valves standards, and valves supplied with packing also conform to MSS SP-132 compression packing systems for instrument valves standard.

ORDERING INFORMATION								
SERIES	**1**	150/190 Series, soft tip						
CONNECTION SIZE	**51**	1/8" NPT	**92**	7/16"- 20 UNF-2B				
	52	1/4" NPT	**93**	9/16"- 18 UNF-2B				
VALVE TYPE	**MMB**	Male-Male, Brass	**MMC**	Male-Male, Steel		**MMS**	Male-Male, Stainless Steel	
	MFB	Male-Female, Brass	**MFC**	Male-Female, Steel		**MFS**	Male-Female, Stainless Steel	
	FFB	Female-Female, Brass	**FFC**	Female-Female, Steel		**FFS**	Female-Female, Stainless Steel	
	MMAB	Male-Male Angle, Brass	**MMAC**	Male-Male Angle, Steel		**MMAS**	Male-Male Angle, Stainless Steel	
	MFAB	Male-Female Angle, Brass	**MFAC**	Male-Female Angle, Steel		**MFAS**	Male-Female Angle, Stainless Steel	
	FFAB	Female-Female Angle, Brass	**FFAC**	Female-Female Angle, Steel		**FFAS**	Female-Female Angle, Stainless Steel	

Please consult your local NOSHOK Distributor or NOSHOK, Inc. for availability and delivery information.

EXAMPLE **152 – FFC**

Series ..... 150/190 soft tip
Connection size ..... 1/4" NPT
Valve type ..... Female-female, steel

To meet all of your specific application requirements, the following additional options are available for these needle valves. To order all or any of these options, simply add them to the part number as shown in the diagram below.

NOTE 1: The example shown includes ALL possible additional options. Please include ONLY the options required for your application when building your part number. (EXAMPLE: 152-MFC-HL3)

NOTE 2: When a packing option is selected, an o-ring option is NOT available.

ORDERING INFORMATION - Additional Options						
PACKINGS	**P1**	PTFE				
STEM TIPS	**T3**	PTCFE	**T10**	Regulating Delrin®	**T12**	Regulating PEEK
	T4	PEEK	**T11**	Regulating PTCFE		
O-RINGS*	**EM1**	EPDM	**KZ1**	FFKM (Kalrez® 3018 or equivalent)	**NB1**	NBR
PANEL MOUNTINGS	**PM1**	Panel mount (1 nut)	**PM2**	Panel mount (2 nuts)		
HANDLES	**HL3**	1" Round knurled				

Please consult your local NOSHOK Distributor or NOSHOK, Inc. for availability and delivery information.

* Other o-ring materials available on request.

Please note that the standard o-ring in all the NOSHOK mini valves is FKM and the standard handles are brass round knurled handles (HL3), steel mini "T" handles (HL1), and 316SS mini "T" handles (HL1).

The handle material will always match the material of the valve, unless otherwise specified. For example, the round knurled (HL3) on a 152-FFB will be brass. When only the standard configuration is needed, no additional designations are necessary. Please consult the factory for special application requests.

EXAMPLE with Additional Options **152 – FFC – P1 – T3 – PM2 – HL3**

Series.....150/190 soft tip
Connection size.....1/4" NPT
Valve type..... Female-female, steel
Packing.....PTFE
Stem tip..... PTCFE
Panel mount..... Panel mount (2 nuts)
Handle.....1" Round knurled

Dimensions

Male-Male

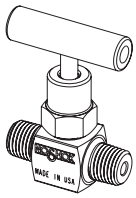

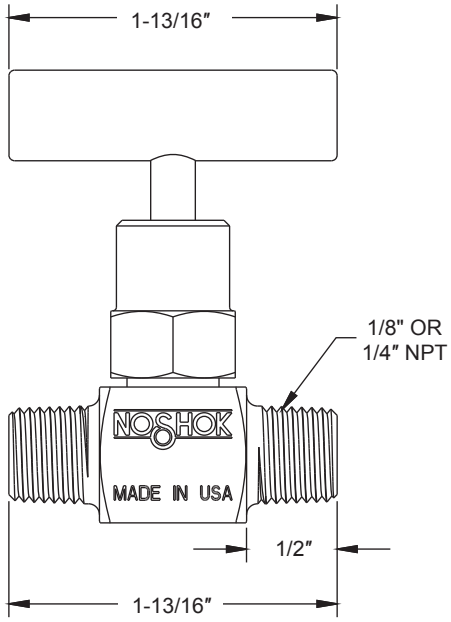

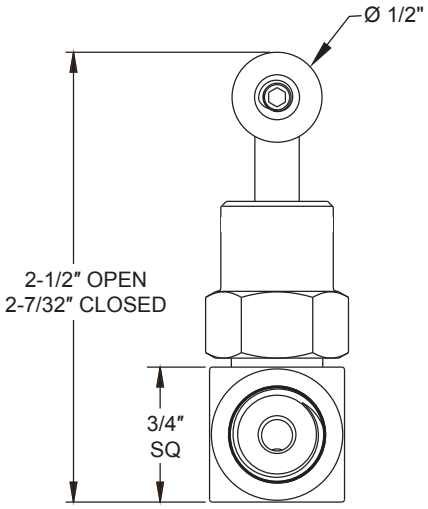

Male-Female

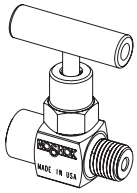

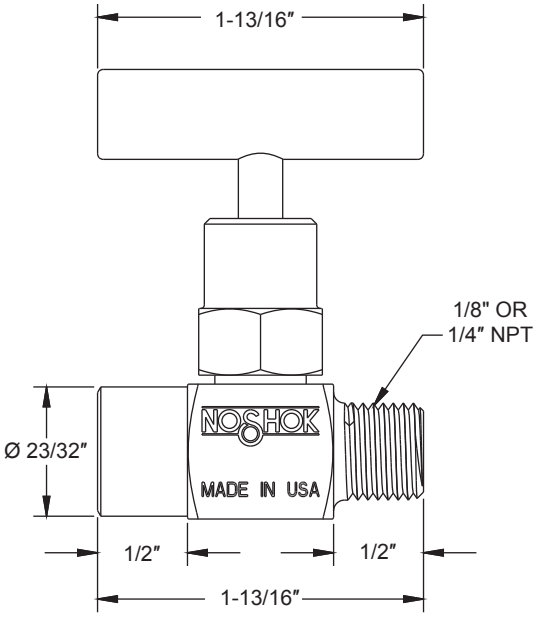

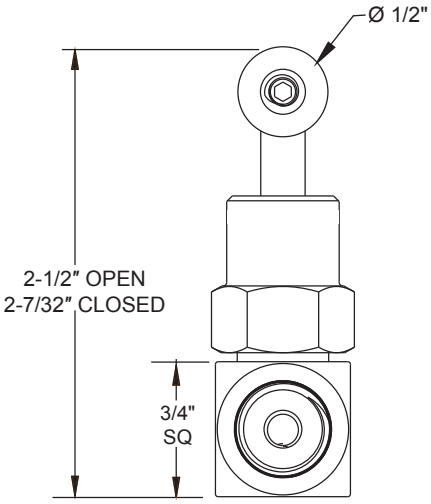

Female-Female

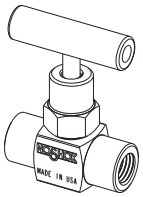

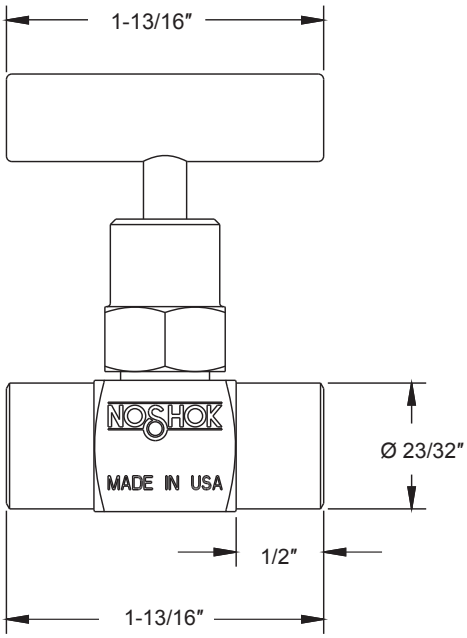

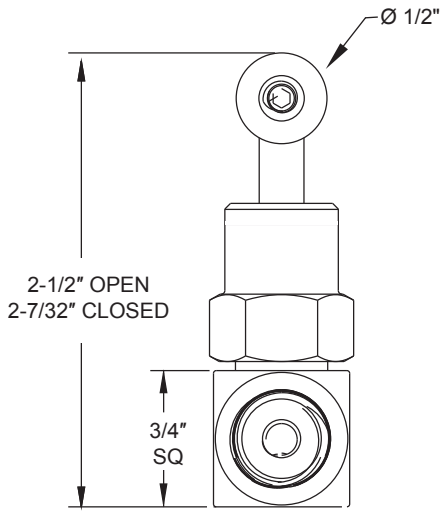

1/8" Male-Male Angle

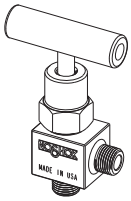

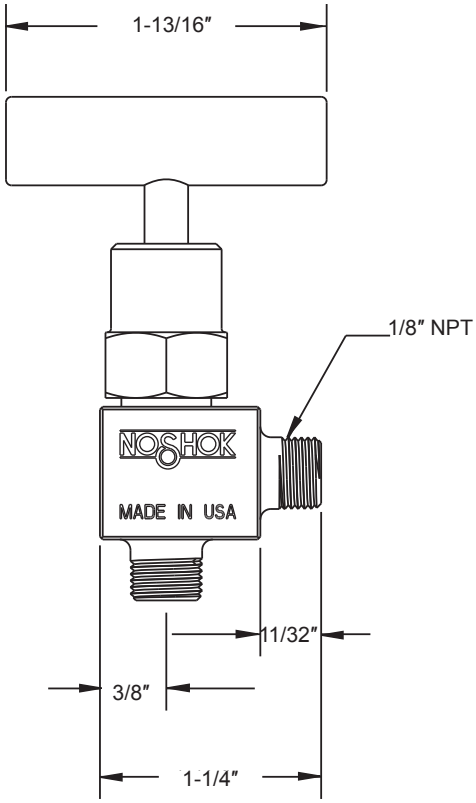

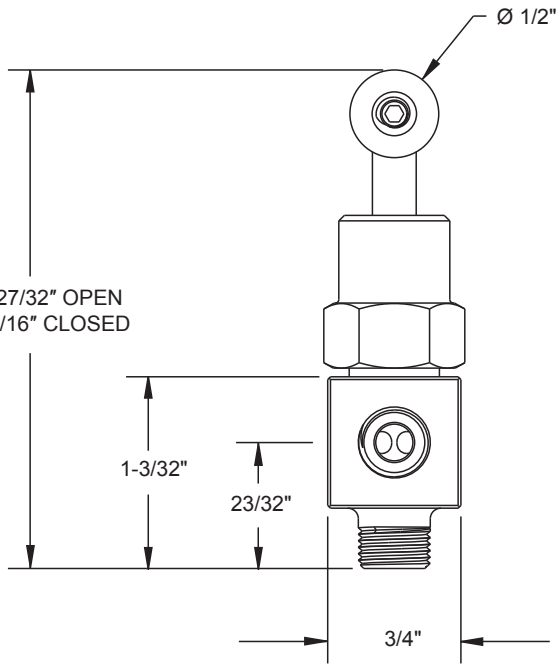

Dimensions

1/4" Male-Male Angle

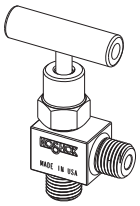

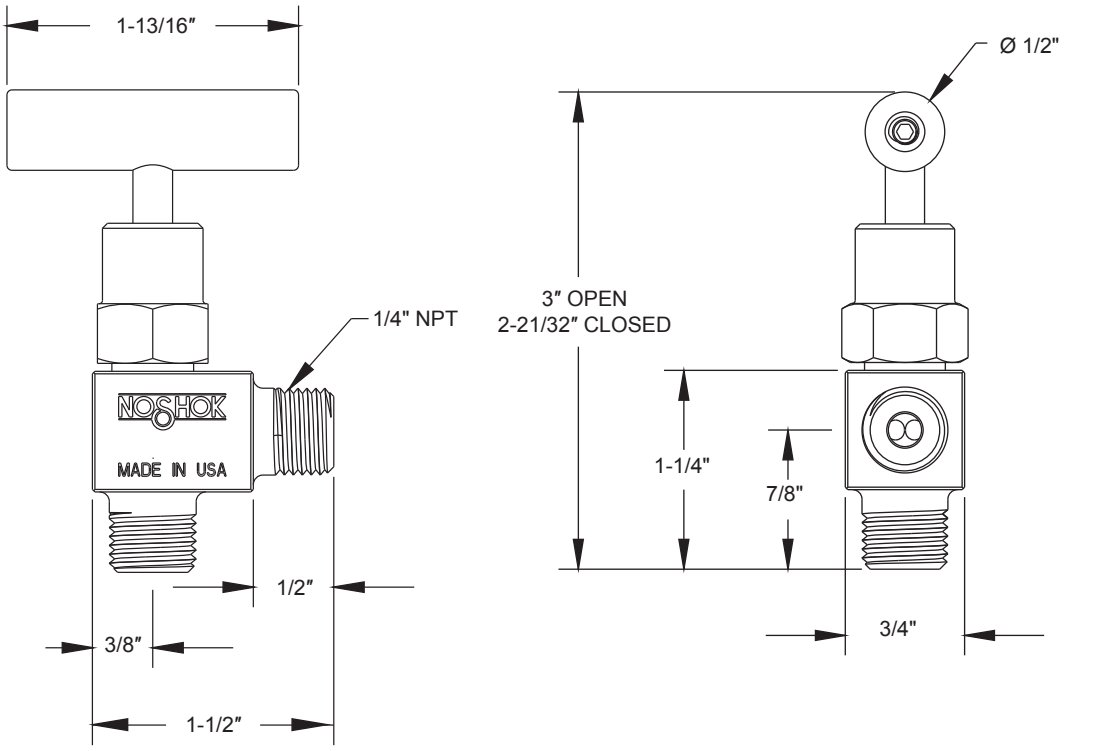

1/8" Male-Female Angle

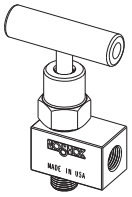

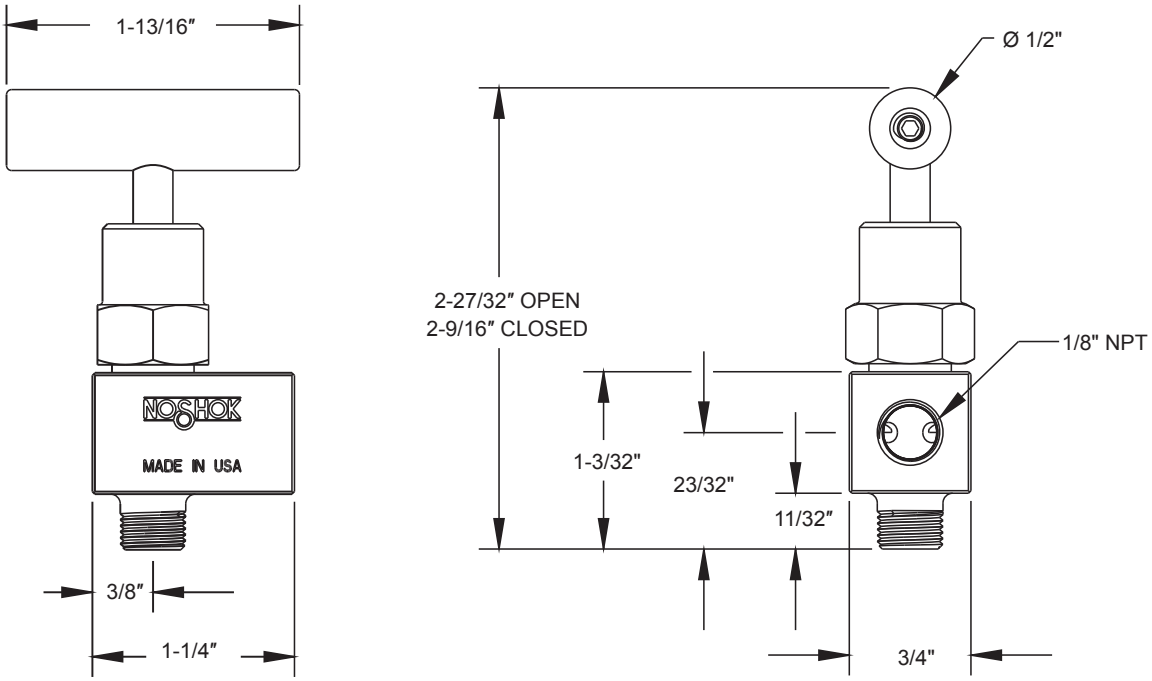

1/4" Male-Female Angle

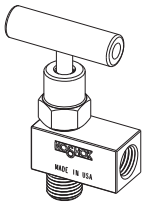

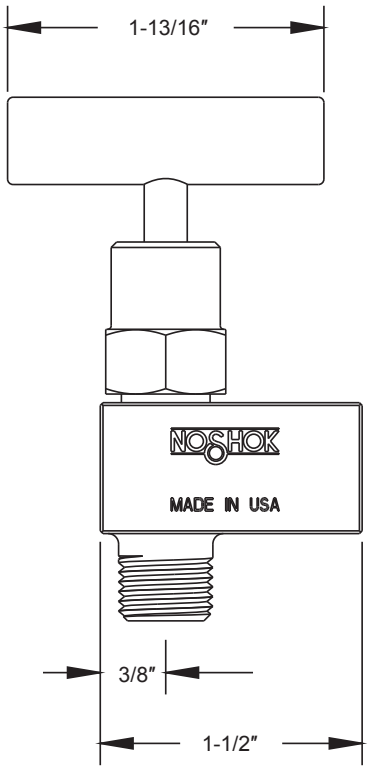

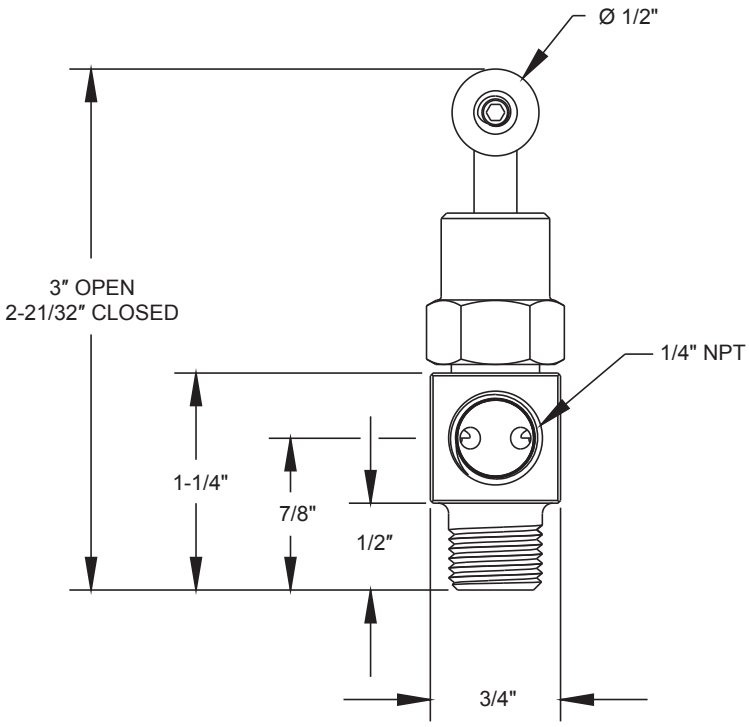

1/8" Female-Female Angle

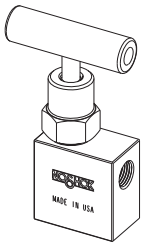

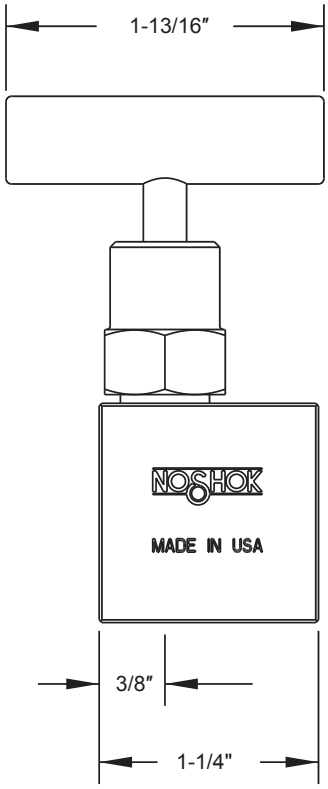

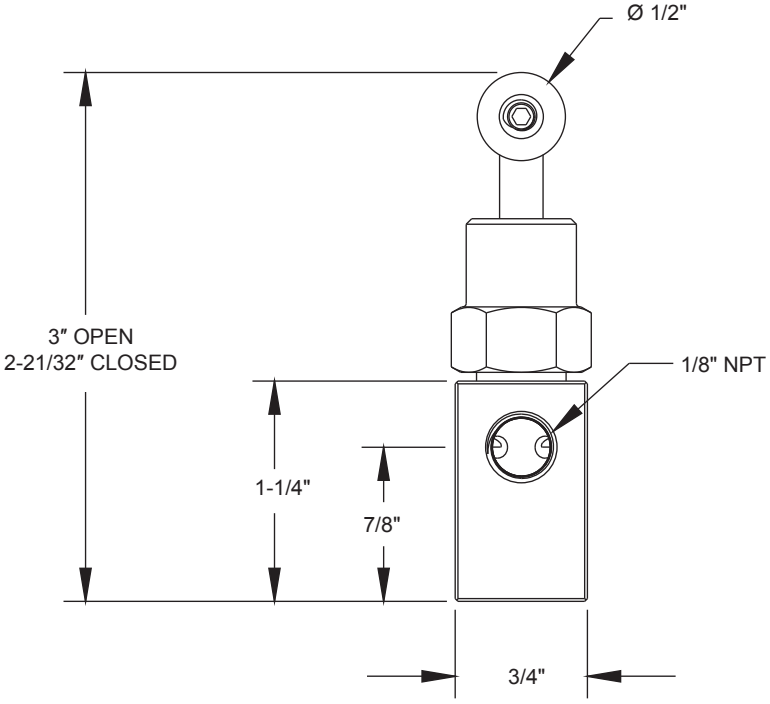

Dimensions

1/4" Female-Female Angle

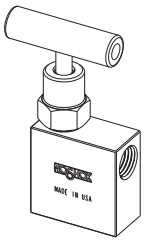

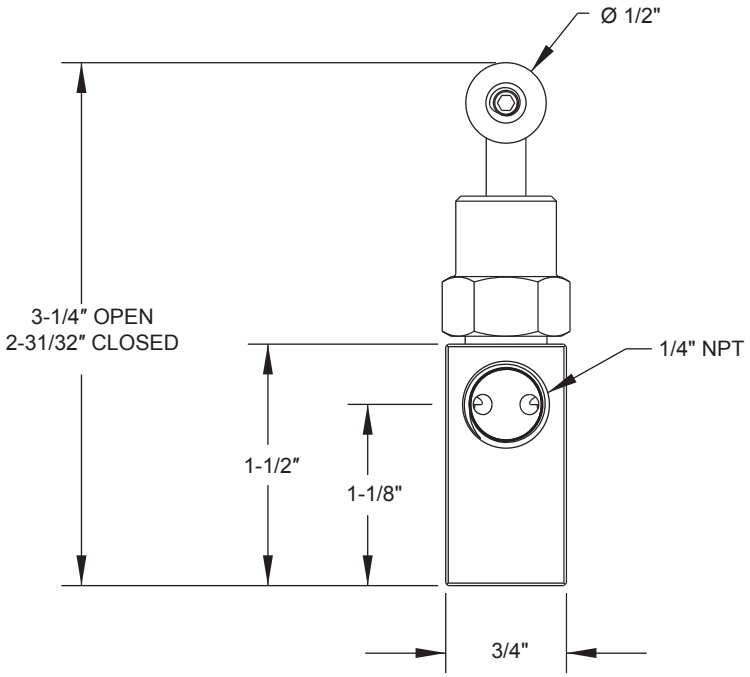

For panel mount and packing dimensions, see pgs. 64-65.

Mini, Soft Tip

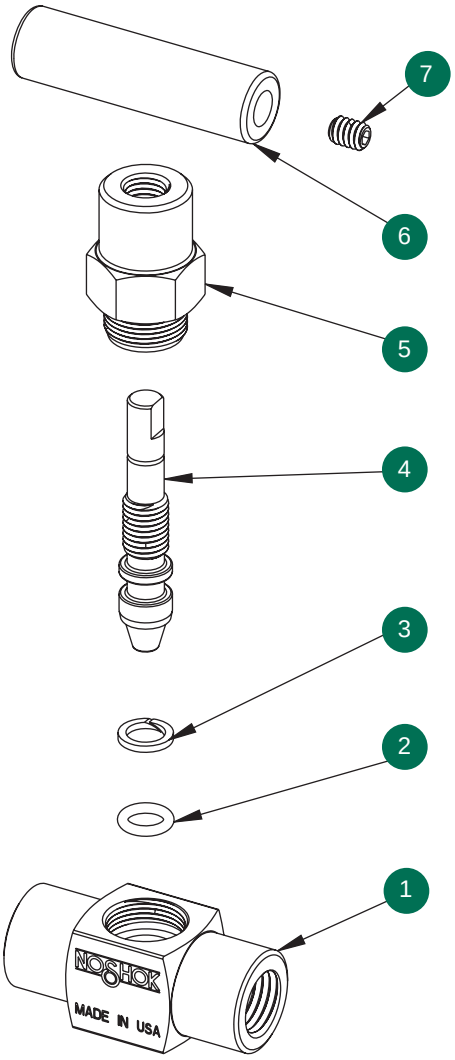

1 Mini valve body
2 FKM o-ring
3 PTFE back-up ring
4 Soft tip stem
5 Mini valve bonnet
6 Mini valve “T” handle
7 Set screw

Option With Packing

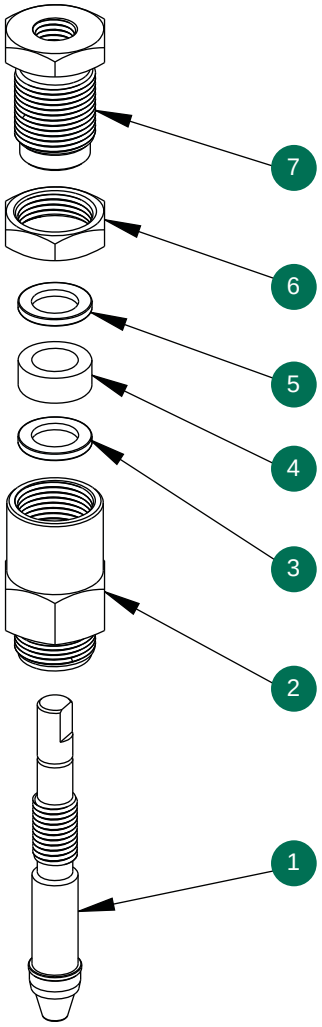

1 Soft tip packing stem
2 Mini valve packing bonnet
3 Packing washer
4 Packing
5 Packing washer
6 Jam nut
7 Packing adjustment screw

Multiport, Hard Seat

200 SERIES

- Multiport design reduces the number of gauge and other instrument connections to permanent piping installations, decreasing possible leak paths
- Optional bleed plugs further allow pressure to be bled off without disturbing the permanent piping installation
- 100% helium leak tested to 1 x 10^{-4} ml/s for guaranteed performance and reliability
- 10,000 psi pressure rating @ 200°F
- Blow-out proof stem provides a secondary stem seal in the full open position
- FKM o-ring seal and PTFE back-up ring below the stem threads to protect from corrosion and galling; PTFE or Grafoil® packing optional
- All stems are 316 stainless steel
- All stem threads are rolled for strength and ease of operation
- One-piece bonnet with a metal-to-metal seal to the valve body below the bonnet threads
- Slotted spring pin to prevent accidental loosening
- Vinyl dust cap for bonnet and stem (non-packing)

SPECIFICATIONS	
Materials	Zinc-nickel plated steel, electropolished 316 stainless steel
Connections	1/2" NPT to 3/4" NPT Male-female
Pressure rating	10,000 psi @ 200°F
Orifice size	0.187"
Flow coefficient	C_V 0.44
Stem seal & type	All 316 stainless steel stems with FKM o-ring and PTFE back-up ring below the threads, PTFE or Grafoil® packing optional
Options	Panel mountings, o-ring materials, handles, packings, regulating stem and stem tips

NOTE: All NOSHOK valve products conform to the MSS SP-99 instrument valves standards, and valves supplied with packing also conform to MSS SP-132 compression packing systems for instrument valves standard.

ORDERING INFORMATION				
SERIES	**2**	200 Series, hard seat		
CONNECTION SIZE	**04**	1/2" NPT	**0604**	3/4" NPT male - 1/2" NPT female
VALVE TYPE	**MFC**	Male-Female, Steel	**MFS**	Male-Female, Stainless Steel

Please consult your local NOSHOK Distributor or NOSHOK, Inc. for availability and delivery information.

EXAMPLE

204 – MFC

Series..... 200 hard seat
Connection size .....1/2" NPT
Valve type ..... Male-female, steel

To meet all of your specific application requirements, the following additional options are available for these needle valves. To order all or any of these options, simply add them to the part number as shown in the diagram below.

NOTE 1: The example shown includes ALL possible additional options. Please include ONLY the options required for your application when building your part number. (EXAMPLE: 204-MFC-BP)

NOTE 2: When a packing option is selected, an o-ring option is NOT available.

ORDERING INFORMATION - Additional Options						
PLUGS	**PG**	Plug†	**BP**	Bleed plug†		
PACKINGS	**P1**	PTFE	**P2**	Grafoil®		
STEM TIPS	**T1**	Non-rotating (316 stainless)	**T6**	Ball (carbide)	**T8**	Ball (Monel)
	T5	Ball (440C stainless)	**T7**	Ball (ceramic)	**T9**	Regulating hard
O-RINGS*	**EM1**	EPDM	**KZ1**	FFKM (Kalrez® 3018 or equivalent)	**NB1**	NBR
PANEL MOUNTINGS	**PM1**	Panel mount (1 nut)	**PM2**	Panel mount (2 nuts)		
HANDLES	**HL1**	1-13/16" Mini "T"	**HL4**	1-3/8" Phenolic	**HL5**	1-3/4" Phenolic

Please consult your local NOSHOK Distributor or NOSHOK, Inc. for availability and delivery information.

* Other o-ring materials available on request.
† The plug material will always match the material of the valve. All plugs can also be ordered separately, see pg. 64-65.

Please note that the standard o-ring in all the NOSHOK valves is FKM and the standard handles are "T" handles (HL2).

The handle material will always match the material of the valve, unless otherwise specified. For example, the "T" handle (HL2) on the 204-MFC will be steel. When only the standard configuration is needed, no additional designations are necessary. Please consult the factory for special application requests

EXAMPLE with Additional Options

204 – MFC – PG – T5 – EM1

Series.....200 hard seat
Connection size ..... 1/2" NPT
Valve type .....Male-female, steel
Plug..... Steel
Stem tip ..... Ball (440C stainless)
O-ring..... EPDM

Dimensions

Male-Female

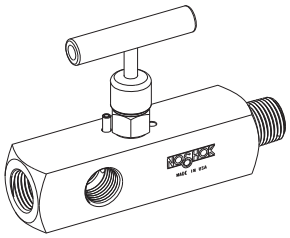

Front View

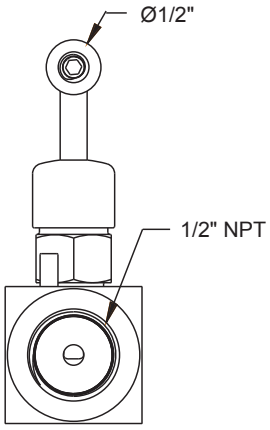

Side View

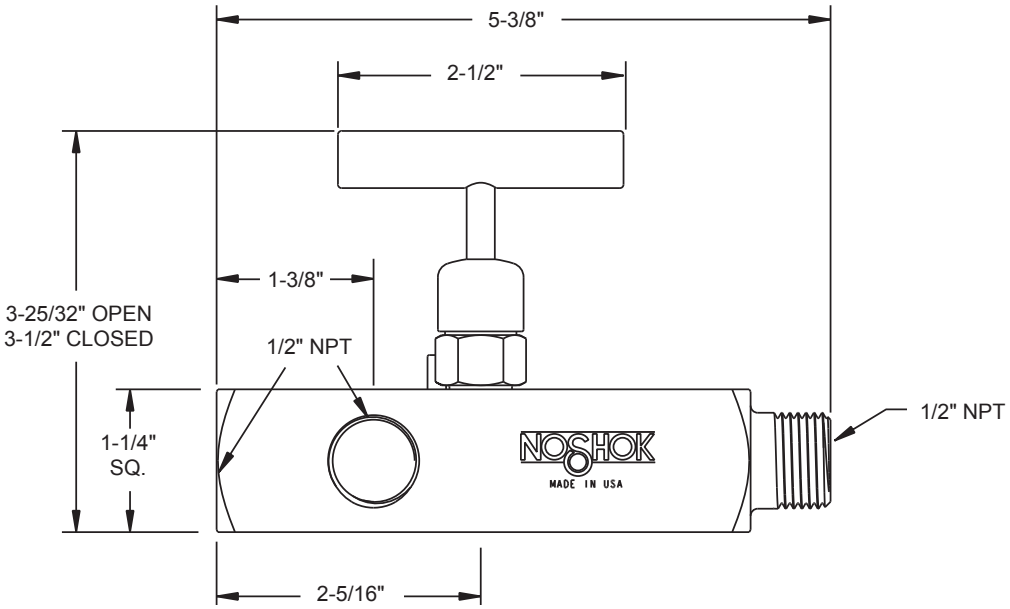

For panel mount and packing dimensions, see pgs. 64-65.

Multiport, Hard Seat

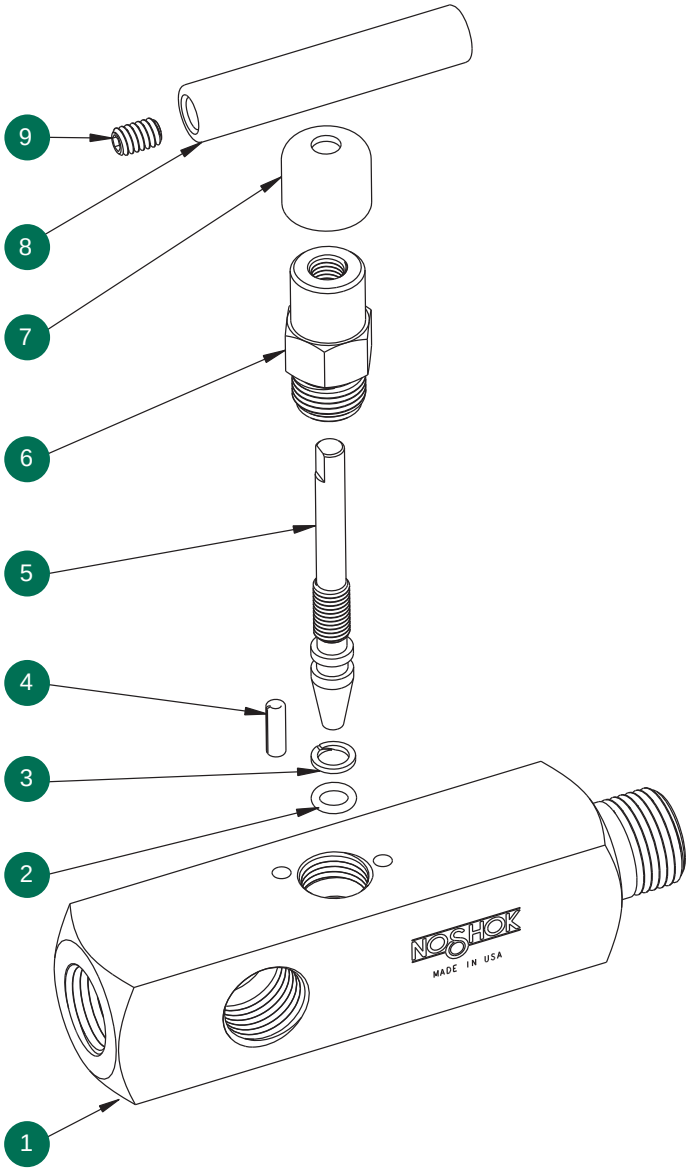

1 Valve body
2 FKM o-ring
3 PTFE back-up ring
4 Slotted spring pin
5 Valve stem
6 Valve bonnet
7 Dust cap
8 Valve “T” handle
9 Set screw

Option With Packing

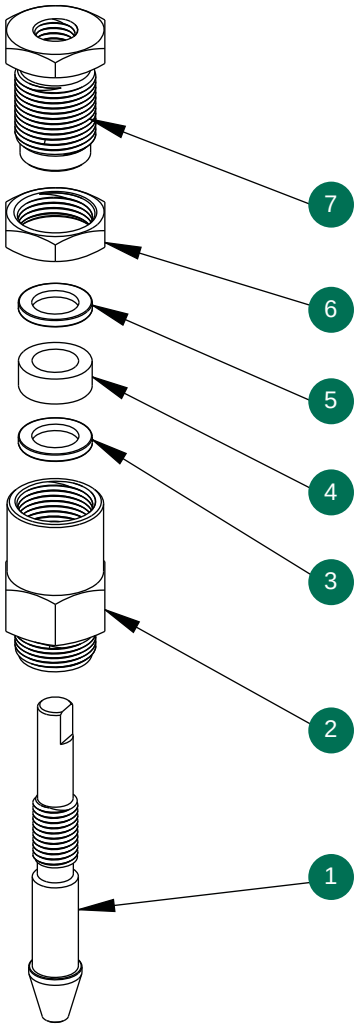

1 Valve packing stem
2 Valve packing bonnet
3 Packing washer
4 Packing
5 Packing washer
6 Jam nut
7 Packing adjustment screw

Multiport, Soft Seat

300 SERIES

- Multiport design reduces the number of gauge and other instrument connections to permanent piping installations, decreasing possible leak paths
- Optional bleed plugs further allow pressure to be bled off without disturbing the permanent piping installation
- 100% helium leak tested to 1 x 10^{-4} ml/s for guaranteed performance and reliability
- 6,000 psi pressure rating @ 200°F
- Replaceable Delrin® seat and straight through porting for bidirectional, high capacity flow and easy roddable cleaning
- PCTFE or PEEK soft seat optional
- Blow-out proof stem provides a secondary stem seal in the full open position
- FKM o-ring seal and PTFE back-up ring below the stem threads to protect from corrosion and galling; PTFE packing optional
- All stems are 316 stainless steel
- All stem threads are rolled for strength and ease of operation
- One-piece bonnet with a metal-to-metal seal to the valve body below the bonnet threads
- Slotted spring pin to prevent accidental loosening
- Vinyl dust cap for bonnet and stem (non-packing)

SPECIFICATIONS	
Materials	Zinc-nickel plated steel, electropolished 316 stainless steel
Connections	1/2" NPT to 3/4" NPT Male-female Straight through porting for bidirectional, high capacity flow
Pressure rating	6,000 psi @ 200°F
Orifice size	0.187"
Flow coefficient	C_V 0.64
Stem seal & type	All 316 stainless steel stems with FKM o-ring and PTFE back-up ring below the threads, PTFE packing optional
Options	Panel mountings, o-ring materials, handles, packings, regulating stem and stem tips

NOTE: All NOSHOK valve products conform to the MSS SP-99 instrument valves standards, and valves supplied with packing also conform to MSS SP-132 compression packing systems for instrument valves standard.

ORDERING INFORMATION				
SERIES	**3**	300 Series, soft seat		
CONNECTION SIZE	**04**	1/2" NPT	**0604**	3/4" NPT male - 1/2" NPT female
VALVE TYPE	**MFC**	Male-Female, Steel	**MFS**	Male-Female, Stainless Steel

Please consult your local NOSHOK Distributor or NOSHOK, Inc. for availability and delivery information.

EXAMPLE **304 – MFC**

Series..... 300 soft seat
Connection size..... 1/2" NPT
Valve type.....Male-female, steel

To meet all of your specific application requirements, the following additional options are available for these needle valves. To order all or any of these options, simply add them to the part number as shown in the diagram below.

NOTE 1: The example shown includes ALL possible additional options. Please include ONLY the options required for your application when building your part number. (EXAMPLE: 304-MFC-HL5)

NOTE 2: When a packing option is selected, an o-ring option is NOT available.

ORDERING INFORMATION - Additional Options						
PLUGS	**PG**	Plug†	**BP**	Bleed Plug†		
SOFT SEATS	**PK1**	PEEK	**KF1**	PCTFE		
PACKINGS	**P1**	PTFE				
STEM TIPS	**T1**	Non-rotating (316 stainless)				
O-RINGS*	**EM1**	EPDM	**KZ1**	FFKM (Kalrez® 3018 or equivalent)	**NB1**	NBR
PANEL MOUNTINGS	**PM1**	Panel mount (1 nut)	**PM2**	Panel mount (2 nuts)		
HANDLES	**HL4**	1-3/8" Phenolic	**HL5**	1-3/4" Phenolic		

Please consult your local NOSHOK Distributor or NOSHOK, Inc. for availability and delivery information.

* Other o-ring materials available on request.
† The plug material will always match the material of the valve. All plugs can also be ordered separately, see pg. 64-65.

Please note that the standard o-ring in all the NOSHOK valves is FKM and the standard handles are "T" handles (HL2).

The handle material will always match the material of the valve, unless otherwise specified. For example, the "T" handle (HL2) on the 304-MFC will be steel. When only the standard configuration is needed, no additional designations are necessary. Please consult the factory for special application requests

EXAMPLE with Additional Options **304 – MFC – PG – PK1 – P1 – HL5**

Series..... 300 soft seat
Connection size.....1/2" NPT
Valve type.....Male-female, steel
Plug.....Steel
Soft seat..... PEEK
Packing.....PTFE
Handle..... 1-3/4" Phenolic

Dimensions

Male-Female

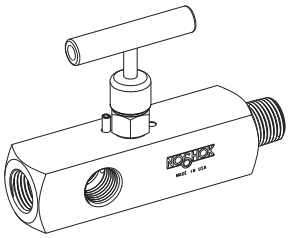

Front View

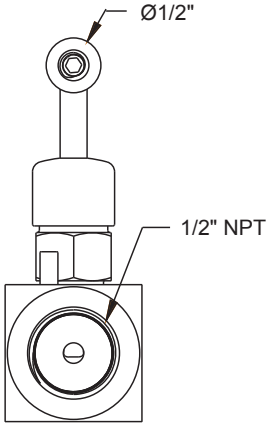

Side View

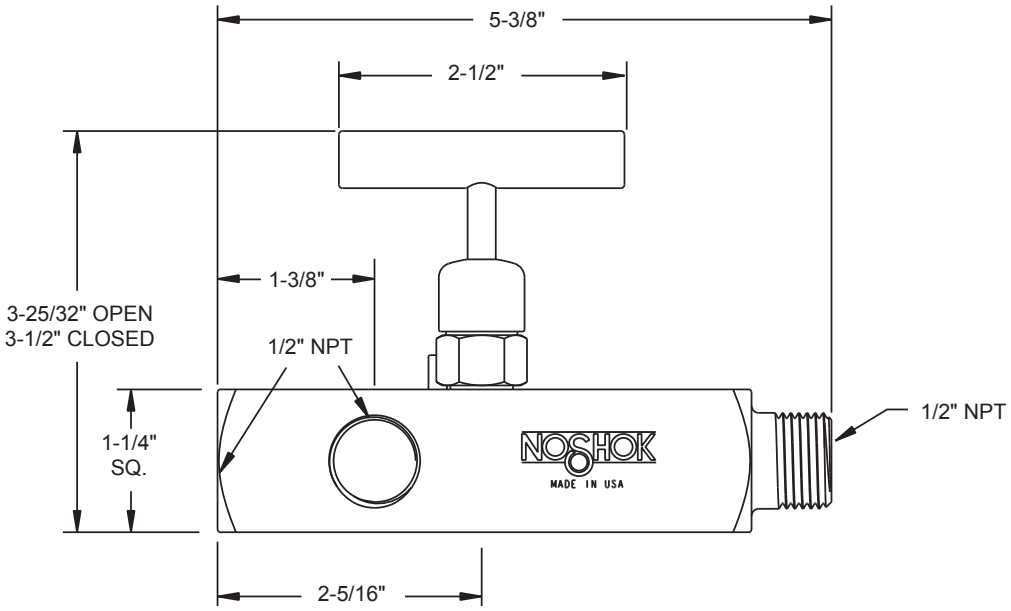

For panel mount and packing dimensions, see pgs. 64-65.

Multiport, Soft Seat

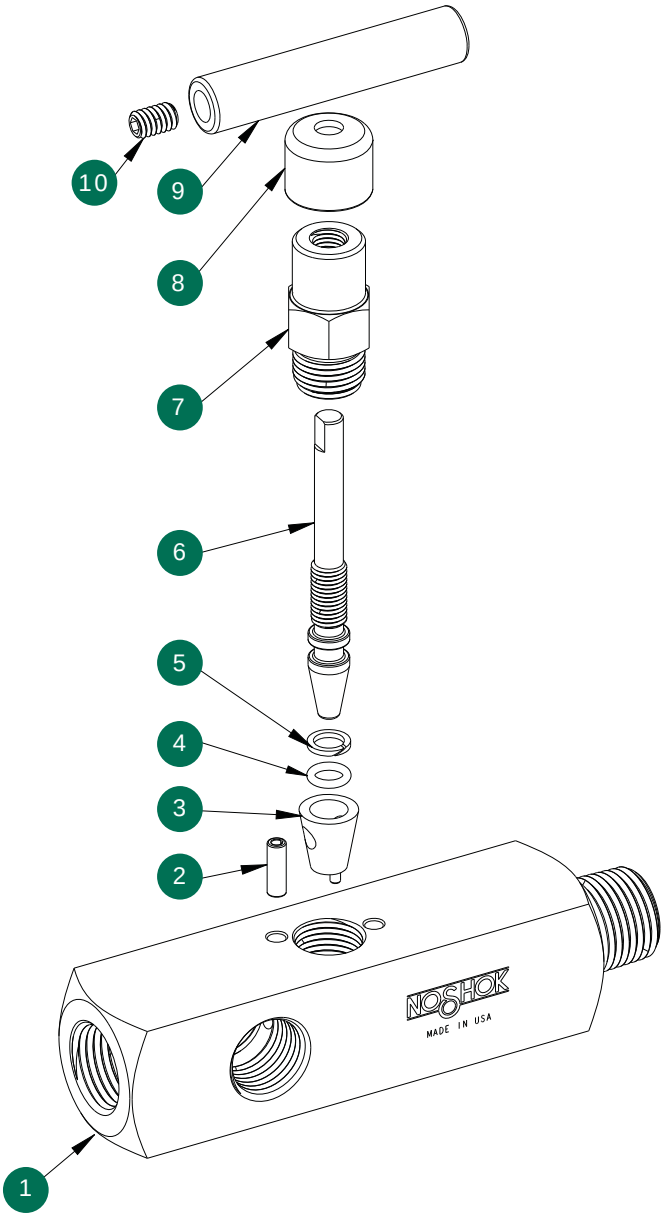

1 Valve body
2 Slotted spring pin
3 Delrin® seat
4 FKM o-ring
5 PTFE back-up ring
6 Valve stem
7 Valve bonnet
8 Dust cap
9 Valve “T” handle
10 Set screw

Option With Packing

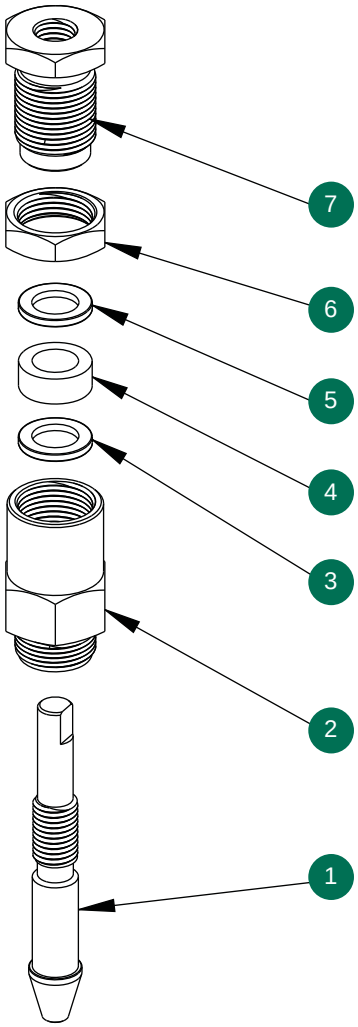

1 Valve packing stem
2 Valve packing bonnet
3 Packing washer
4 Packing
5 Packing washer
6 Jam nut
7 Packing adjustment screw

Standard, Hard Seat

400 SERIES

- 100% helium leak tested to 1 x 10^{-4} ml/s for guaranteed performance and reliability
- 10,000 psi pressure rating @ 200°F
- Blow-out proof stem provides a secondary stem seal in the full open position
- FKM o-ring seal and PTFE back-up ring below the stem threads to protect from corrosion and galling; PTFE or Grafoil® packing optional (certain NPT sizes only)
- All stems are 316 stainless steel
- All stem threads are rolled for strength and ease of operation
- One-piece bonnet with a metal-to-metal seal to the valve body below the bonnet threads
- Slotted spring pin to prevent accidental loosening
- Vinyl dust cap for bonnet and stem (non-packing)

SPECIFICATIONS	
Materials	Zinc-nickel plated steel, electropolished 316 stainless steel
Connections	1/4", 3/8", 1/2", 3/4", 1", 1-1/4" & 1-1/2" NPT 7/16"-20 UNF (#4 SAE, J1926) Male-female, Female-female, in-line and angled configurations
Pressure rating	10,000 psi @ 200°F
Orifice sizes	1/4" - 1/2" NPT: 0.187" 3/4" - 1-1/2" NPT: 0.438"
Flow coefficient	1/4" - 1/2" NPT: C_V 0.44 3/4" - 1-1/2" NPT: C_V 2.70
Stem seal & type	All 316 stainless steel stems with FKM o-ring and PTFE back-up ring below the threads, PTFE or Grafoil® packing optional for 1/4", 3/8" & 1/2" NPT only
Options	Panel mountings, o-ring materials, handles, packings, regulating stem and stem tips

NOTE: All NOSHOK valve products conform to the MSS SP-99 instrument valves standards, and valves supplied with packing also conform to MSS SP-132 compression packing systems for instrument valves standard.

ORDERING INFORMATION						
SERIES	**4**	400 Series, hard seat				
CONNECTION SIZE	**02**	1/4" NPT	**06**	3/4" NPT	**12**	1-1/2" NPT
	03	3/8" NPT	**08**	1" NPT	**42**	7/16"-20 UNF (#4 SAE, J1926)
	04	1/2" NPT	**10**	1-1/4" NPT		
VALVE TYPE	**MFC**	Male-Female, Steel	**MFS**	Male-Female, Stainless Steel		
	FFC	Female-Female, Steel	**FFS**	Female-Female, Stainless Steel		
	MFAC	Male-Female Angle, Steel	**MFAS**	Male-Female Angle, Stainless Steel		
	FFAC	Female-Female Angle, Steel	**FFAS**	Female-Female Angle, Stainless Steel		

Please consult your local NOSHOK Distributor or NOSHOK, Inc. for availability and delivery information.

EXAMPLE **404 – FFC**

Series.....400 hard seat
Connection size.....1/2" NPT
Valve type.....Female-female, steel

To meet all of your specific application requirements, the following additional options are available for these needle valves. To order all or any of these options, simply add them to the part number as shown in the diagram below.

NOTE 1: The example shown includes ALL possible additional options. Please include ONLY the options required for your application when building your part number. (EXAMPLE: 404-FFC-PM2)

NOTE 2: When a packing option is selected, an o-ring option is NOT available.

NOTE 3: Packing options are NOT available on 3/4" NPT through 1-1/2" NPT valves.

ORDERING INFORMATION - Additional Options						
PACKINGS†	**P1**	PTFE	**P2**	Grafoil®		
STEM TIPS	**T1**	Non-rotating (316 stainless)	**T6**	Ball (carbide)	**T8**	Ball (Monel)
	T5	Ball (440C stainless)	**T7**	Ball (ceramic)	**T9**	Regulating hard
O-RINGS*	**EM1**	EPDM	**KZ1**	FFKM (Kalrez® 3018 or equivalent)	**NB1**	NBR
PANEL MOUNTINGS	**PM1**	Panel mount (1 nut)	**PM2**	Panel mount (2 nuts)		
HANDLES	**HL4**	1-3/8" Phenolic	**HL5**	1-3/4" Phenolic	**HL9**	2-3/8" Phenolic**

Please consult your local NOSHOK Distributor or NOSHOK, Inc. for availability and delivery information.

† For 1/4", 3/8" and 1/2" NPT only.
* Other o-ring materials available on request.
** For 3/4" NPT to 1-1/2" NPT only.

The standard o-ring in all the NOSHOK valves is FKM and the standard handles are "T" handles (HL2).

The handle material will always match the material of the valve, unless otherwise specified. For example, the "T" handle (HL2) on the 404-FFC will be steel. When only the standard configuration is needed, no additional designations are necessary. Please consult the factory for special application requests.

EXAMPLE with Additional Options **404 – FFC – P1 – T1 – PM2 – HL5**

Series.....400 hard seat
Connection size.....1/2" NPT
Valve type.....Female-female, steel
Packing.....PTFE
Stem tip.....Non-rotating
Panel mount.....Panel mount (2 nuts)
Handle.....1-3/4" Phenolic

Dimensions

1/4" -1/2" Female-Female

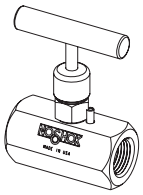

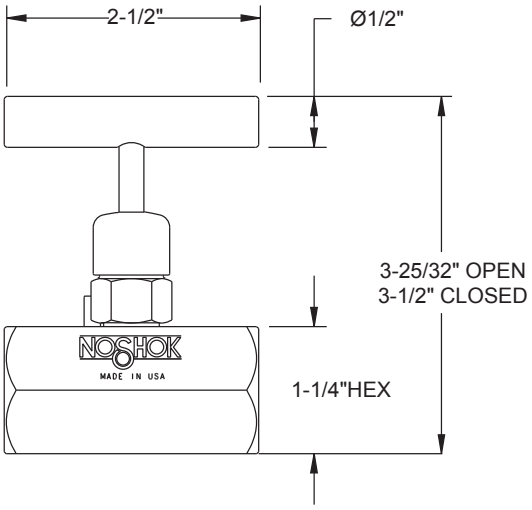

1/4" -1/2" Male-Female

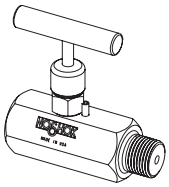

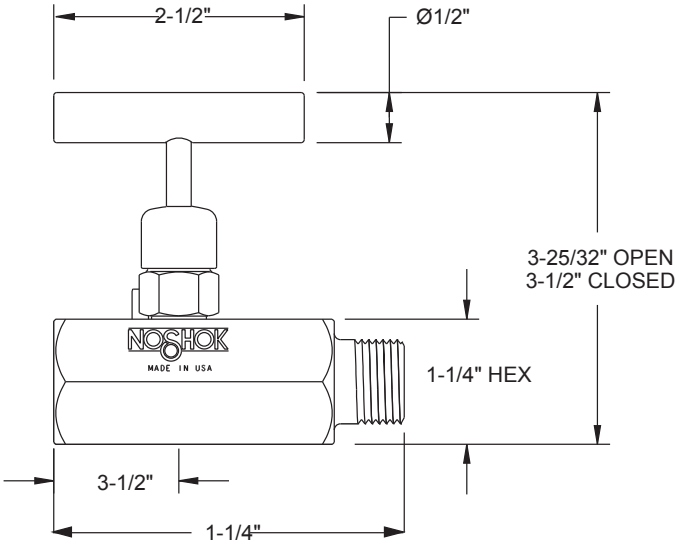

1/4" Female-Female Angle

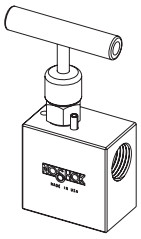

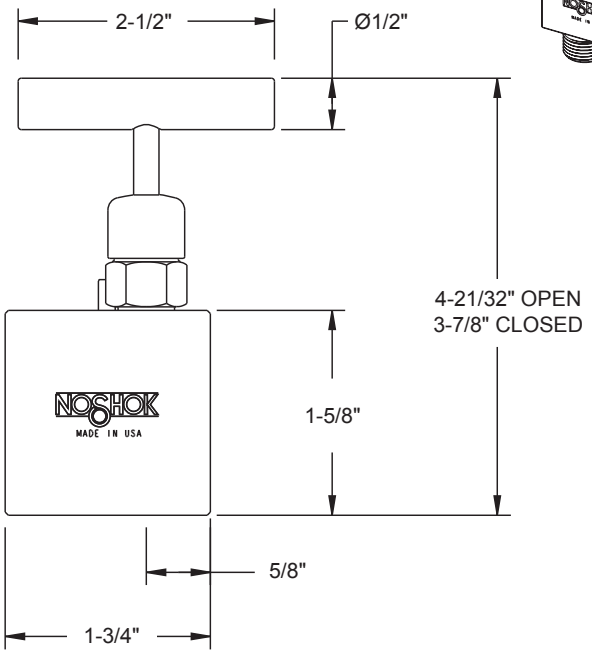

1/4" Male-Female Angle

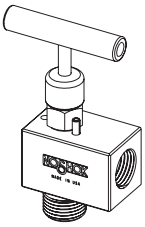

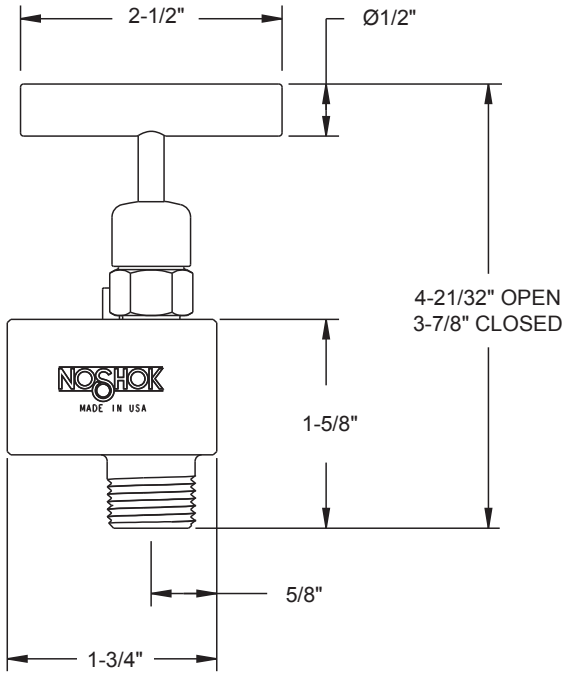

1/2" Female-Female Angle

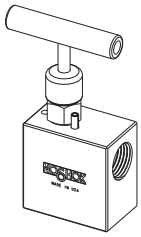

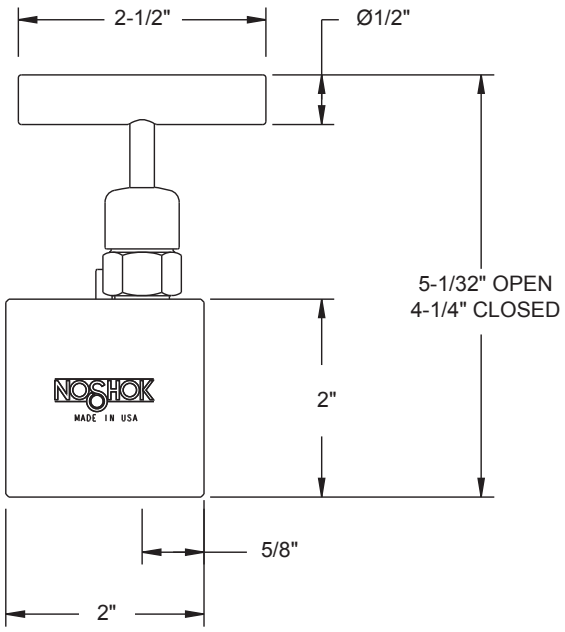

1/2" Male-Female Angle

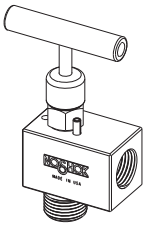

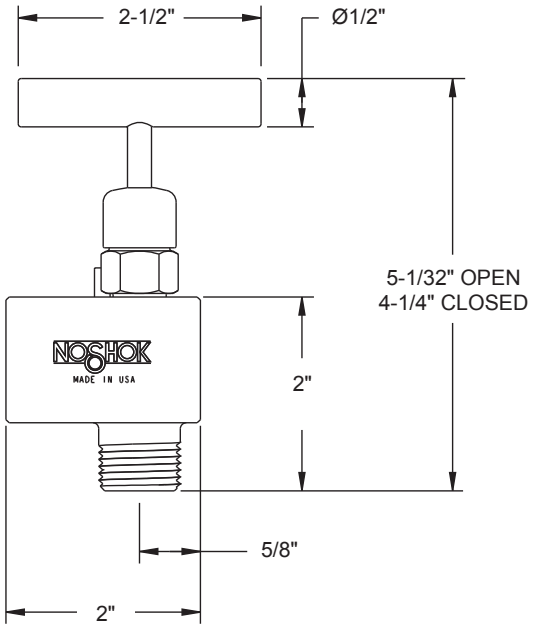

Dimensions

3/4" - 1-1/2" Female-Female

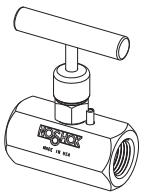

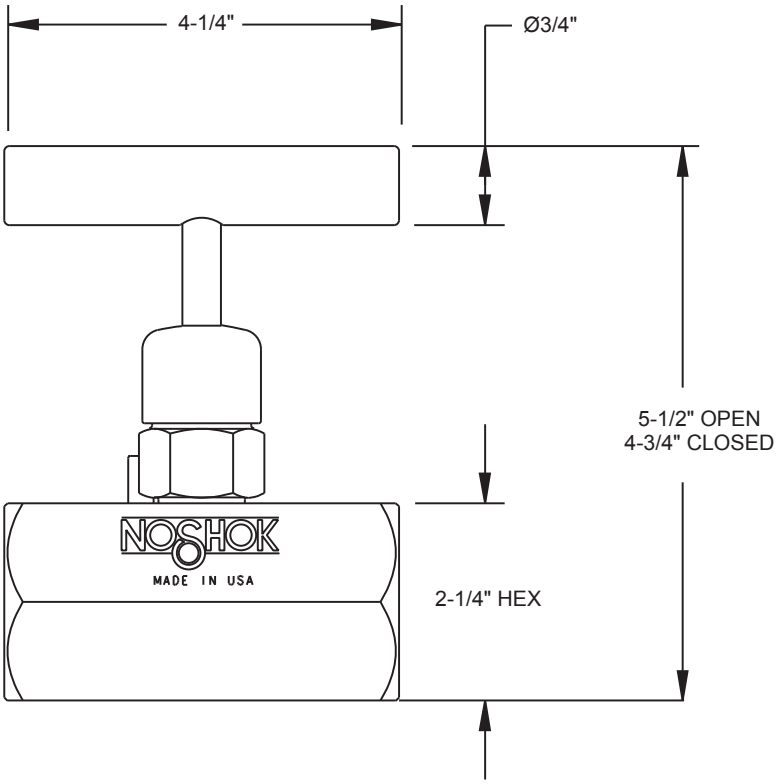

3/4" - 1-1/2" Male-Female

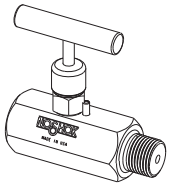

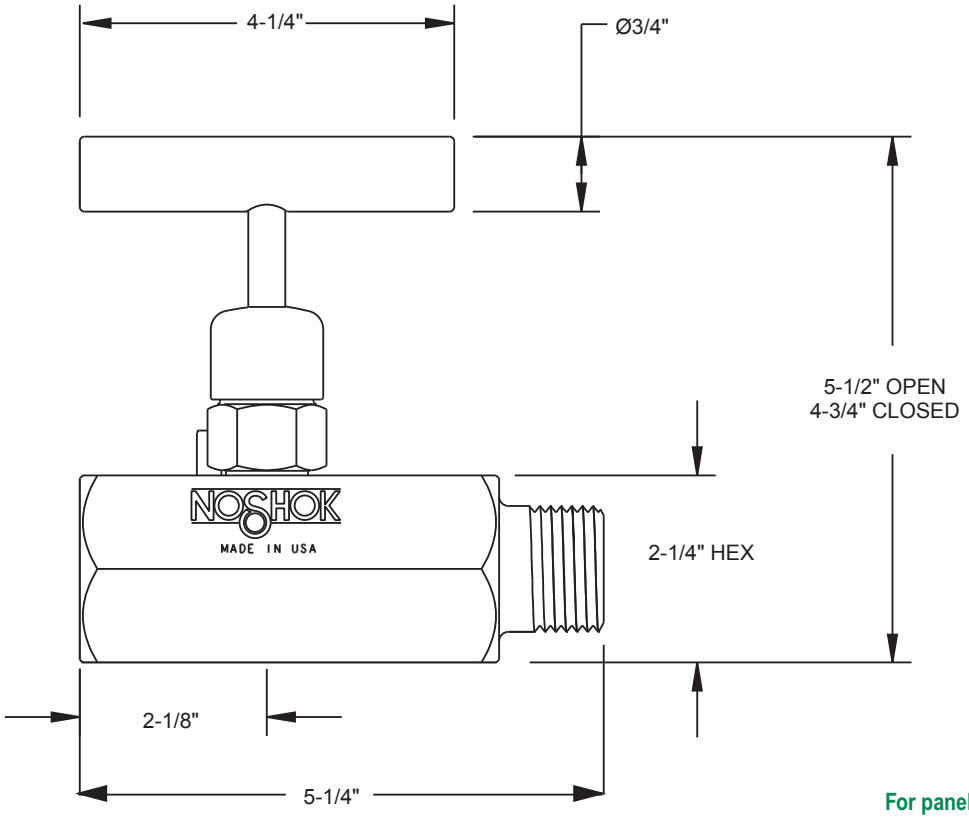

For panel mount and packing dimensions, see pgs. 64-65.

Standard, Hard Seat

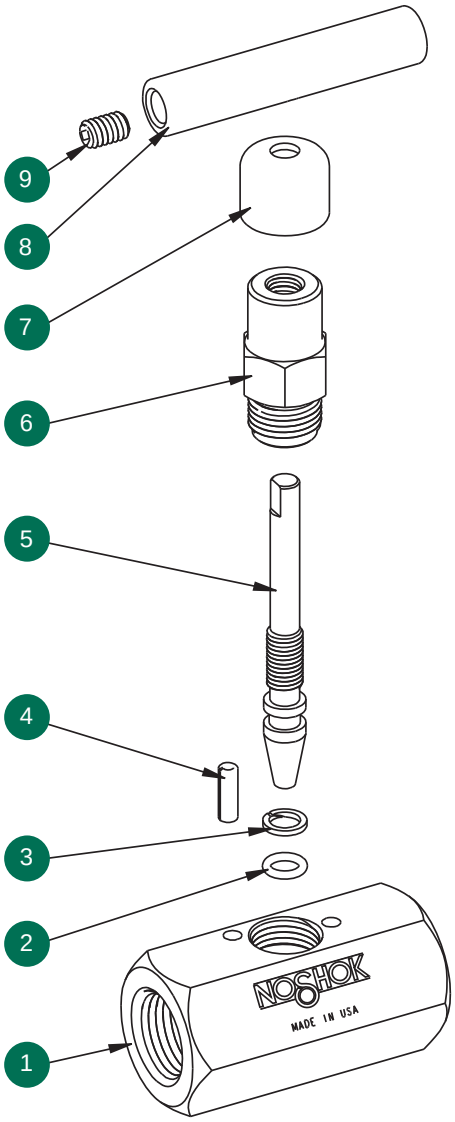

1 Valve body
2 FKM o-ring
3 PTFE back-up ring
4 Slotted spring pin
5 Valve stem
6 Valve bonnet
7 Dust cap
8 Valve “T” handle
9 Set screw

Option With Packing

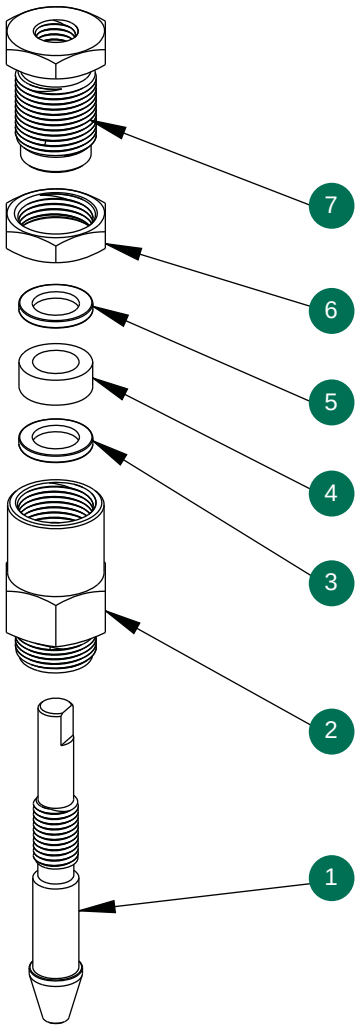

1 Valve packing stem
2 Valve packing bonnet
3 Packing washer
4 Packing
5 Packing washer
6 Jam nut
7 Packing adjustment screw

Standard, Soft Seat

500 SERIES

- 100% helium leak tested to 1 x 10^{-4} ml/s for guaranteed performance and reliability
- 6,000 psi pressure rating @ 200°F
- Replaceable Delrin® seat and straight through porting for bidirectional, high capacity flow and easy roddable cleaning
- Blow-out proof stem provides a secondary stem seal in the full open position
- FKM o-ring seal and PTFE back-up ring below the stem threads to protect from corrosion and galling; PTFE packing optional (certain NPT sizes only)
- All stems are 316 stainless steel
- All stem threads are rolled for strength and ease of operation
- One-piece bonnet with a metal-to-metal seal to the valve body below the bonnet threads
- Slotted spring pin to prevent accidental loosening
- Vinyl dust cap for bonnet and stem (non-packing)

SPECIFICATIONS	
Materials	Zinc-nickel plated steel, electropolished 316 stainless steel
Connections	1/4", 3/8", 1/2", 3/4", 1", 1-1/4" & 1-1/2" NPT Male-female & Female-female configurations
Pressure rating	6,000 psi @ 200°F
Orifice sizes	1/4" - 1/2" NPT: 0.187" 3/4" - 1-1/2" NPT: 0.438"
Flow coefficient	1/4" - 1/2" NPT: C_V 0.76 3/4" - 1-1/2" NPT: C_V 4.0
Stem seal & type	All 316 stainless steel stems with FKM o-ring and PTFE back-up ring below the threads, PTFE packing optional for 1/4", 3/8" & 1/2" NPT only
Options	Panel mountings, o-ring materials, handles, packings, regulating stem and stem tips

NOTE: All NOSHOK valve products conform to the MSS SP-99 instrument valves standards, and valves supplied with packing also conform to MSS SP-132 compression packing systems for instrument valves standard.

ORDERING INFORMATION				
SERIES	**5** 500 Series, soft seat			
CONNECTION SIZE	**02** 1/4" NPT	**04** 1/2" NPT	**08** 1" NPT	**12** 1-1/2" NPT
	03 3/8" NPT	**06** 3/4" NPT	**10** 1-1/4" NPT	**0402** 1/2" NPT male - 1/4" NPT female
VALVE TYPE	**MFC** Male-Female, Steel		**MFS** Male-Female, Stainless Steel	
	FFC Female-Female, Steel		**FFS** Female-Female, Stainless Steel	

Please consult your local NOSHOK Distributor or NOSHOK, Inc. for availability and delivery information.

EXAMPLE **504 – FFC**

Series.....500 soft seat
Connection size .....1/2" NPT
Valve type.....Female-female, steel

To meet all of your specific application requirements, the following additional options are available for these needle valves. To order all or any of these options, simply add them to the part number as shown in the diagram below.

NOTE 1: The example shown includes ALL possible additional options. Please include ONLY the options required for your application when building your part number. (EXAMPLE: 504-FFC-HL5)

NOTE 2: When a packing option is selected, an o-ring option is NOT available.

ORDERING INFORMATION - Additional Options						
SOFT SEATS	**PK1**	PEEK	**KF1**	PCTFE		
PACKINGS	**P1**	PTFE				
STEM TIPS	**T1**	Non-rotating (316 stainless)				
O-RINGS*	**EM1**	EPDM	**KZ1**	FFKM (Kalrez® 3018 or equivalent)	**NB1**	NBR
PANEL MOUNTINGS	**PM1**	Panel mount (1 nut)	**PM2**	Panel mount (2 nuts)		
HANDLES	**HL4**	1-3/8" Phenolic	**HL5**	1-3/4" Phenolic	**HL9**	2-3/8" Phenolic**

Please consult your local NOSHOK Distributor or NOSHOK, Inc. for availability and delivery information.

* Other o-ring materials available on request.
** For 3/4" NPT to 1-1/2" NPT only.

Please note that the standard o-ring in all the NOSHOK valves is FKM and the standard handles are “T” handles (HL2).

The handle material will always match the material of the valve, unless otherwise specified. For example, the “T” handle (HL2) on the 504-FFC will be steel. When only the standard configuration is needed, no additional designations are necessary. Please consult the factory for special application requests.

EXAMPLE with Additional Options **504 – FFC – PK1 – T1 – KZ1 – PM2 – HL5**

Series.....500 soft seat
Connection size .....1/2" NPT
Valve type ..... Female-female, steel
Soft seat .....PEEK
Stem tip .....Non-rotating
O-ring.....FFKM (Kalrez® 3018 or equivalent)
Panel mount ..... Panel mount (2 nuts)
Handle..... 1-3/4" Phenolic

Dimensions

1/4" - 1/2" Male-Female

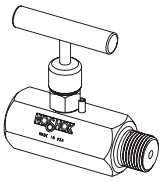

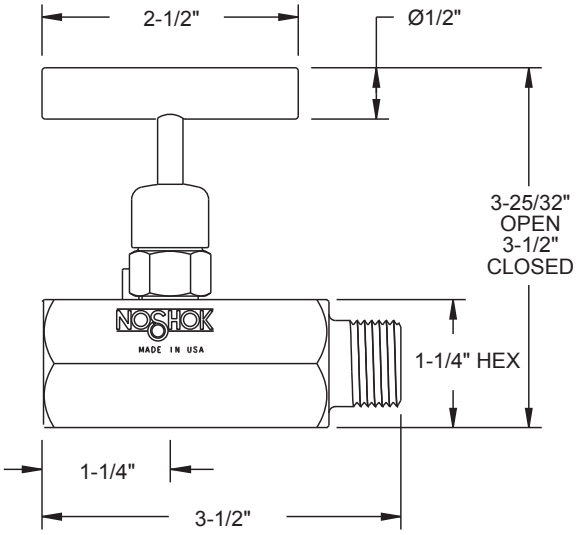

3/4" - 1-1/2" Male-Female

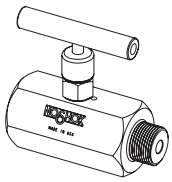

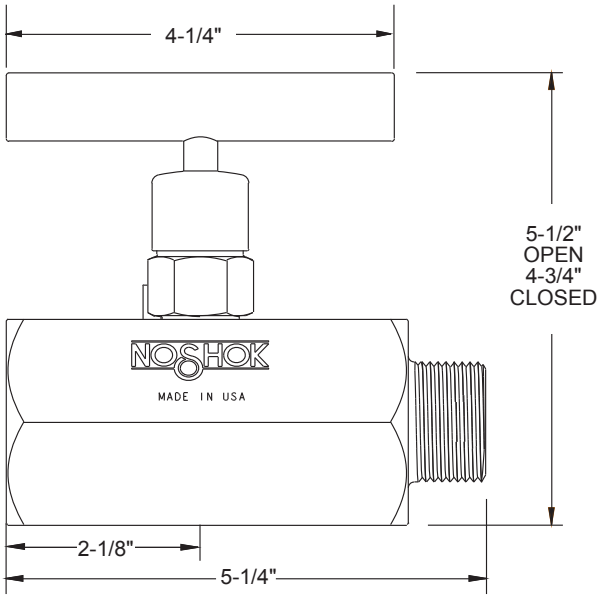

1/4" - 1/2" Female-Female

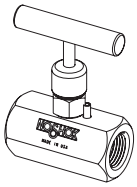

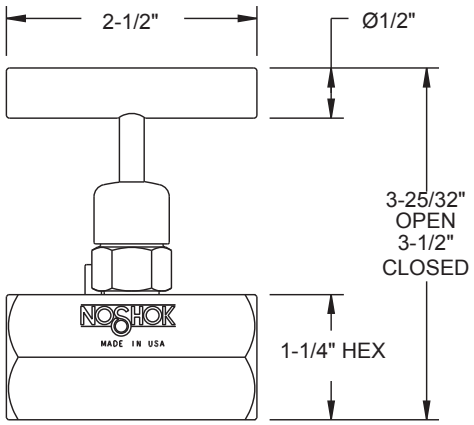

3/4" - 1-1/2" Female-Female

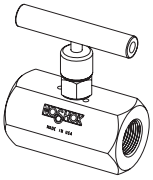

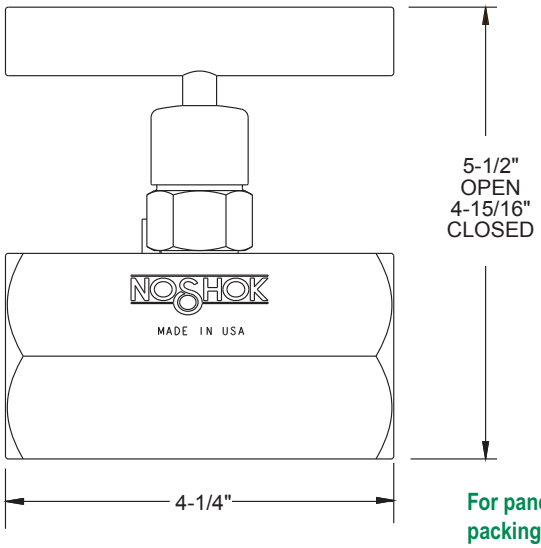

For panel mount and packing dimensions, see pgs. 64-65.

Standard, Soft Seat

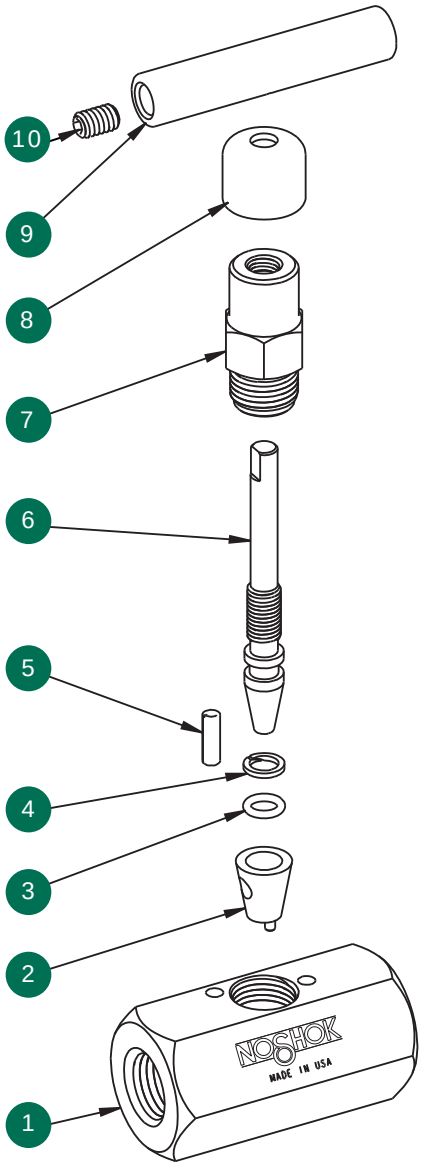

1 Valve body
2 Delrin® seat
3 FKM o-ring
4 PTFE back-up ring
5 Slotted spring pin
6 Valve stem
7 Valve bonnet
8 Dust cap
9 Valve “T” handle
10 Set screw

Option With Packing

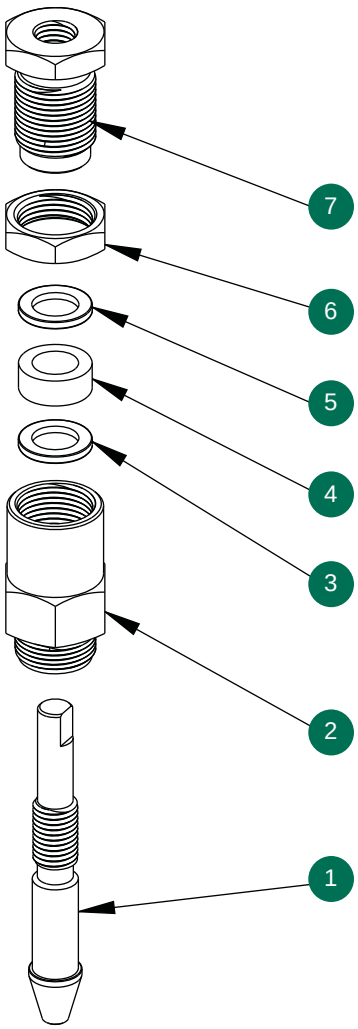

1 Valve packing stem
2 Valve packing bonnet
3 Packing washer
4 Packing
5 Packing washer
6 Jam nut
7 Packing adjustment screw

Block & Bleed, Hard Seat

600 SERIES

- Block & bleed design allows pressure to be bled off without disturbing the permanent piping installation, allowing quick and easy removal or replacement of instruments
- 100% helium leak tested to 1 x 10^{-4} ml/s for guaranteed performance and reliability
- 10,000 psi pressure rating @ 200°F
- Blow-out proof stem provides a secondary stem seal in the full open position
- FKM o-ring seal and PTFE back-up ring below the stem threads to protect from corrosion and galling; PTFE or Grafoil® packing optional
- All stems are 316 stainless steel
- All stem threads are rolled for strength and ease of operation
- One-piece bonnet with a metal-to-metal seal to the valve body below the bonnet threads
- Slotted spring pin to prevent accidental loosening
- Vinyl dust cap for bonnet and stem (non-packing)
- 0.090" bleed hole located on the bottom is controlled by a 1/4"-20 UNF-2A bleed screw

SPECIFICATIONS	
Materials	Zinc-nickel plated steel, electropolished 316 stainless steel
Connections	1/4" & 1/2" NPT Male-female & Female-female configurations
Pressure rating	10,000 psi @ 200°F
Orifice size	0.187"
Flow coefficient	C_V 0.44
Stem seal & type	All 316 stainless steel stems with FKM o-ring and PTFE back-up ring below the threads, PTFE or Grafoil® packing optional
Options	Panel mountings, o-ring materials, handles, packings, regulating stem and stem tips

NOTE: All NOSHOK valve products conform to the MSS SP-99 instrument valves standards, and valves supplied with packing also conform to MSS SP-132 compression packing systems for instrument valves standard.

ORDERING INFORMATION				
SERIES	**6**	600 Series, hard seat		
CONNECTION SIZE	**02**	1/4" NPT	**04**	1/2" NPT
VALVE TYPE	**MFC**	Male-Female, Steel	**MFS**	Male-Female, Stainless Steel
	FFC	Female-Female, Steel	**FFS**	Female-Female, Stainless Steel

Please consult your local NOSHOK Distributor or NOSHOK, Inc. for availability and delivery information.

EXAMPLE **602 – FFC**

Series.....600 hard seat
Connection size..... 1/4" NPT
Valve type.....Female-female, steel

To meet all of your specific application requirements, the following additional options are available for these needle valves. To order all or any of these options, simply add them to the part number as shown in the diagram below.

NOTE 1: The example shown includes ALL possible additional options. Please include ONLY the options required for your application when building your part number. (EXAMPLE: 602-FFC-P2)

NOTE 2: When a packing option is selected, an o-ring option is NOT available.

ORDERING INFORMATION - Additional Options						
PACKINGS	**P1**	PTFE	**P2**	Grafoil®		
STEM TIPS	**T1**	Non-rotating (316 stainless)	**T6**	Ball (carbide)	**T8**	Ball (Monel)
	T5	Ball (440C stainless)	**T7**	Ball (ceramic)	**T9**	Regulating hard
O-RINGS*	**EM1**	EPDM	**KZ1**	FFKM (Kalrez® 3018 or equivalent)	**NB1**	NBR
PANEL MOUNTINGS	**PM1**	Panel mount (1 nut)	**PM2**	Panel mount (2 nuts)		
HANDLES	**HL4**	1-3/8" Phenolic	**HL5**	1-3/4" Phenolic		

Please consult your local NOSHOK Distributor or NOSHOK, Inc. for availability and delivery information.

* Other o-ring materials available on request.

Please note that the standard o-ring in all the NOSHOK valves is FKM and the standard handles are “T” handles (HL2).

The handle material will always match the material of the valve, unless otherwise specified. For example, the “T” handle (HL2) on the 602-FFC will be steel. When only the standard configuration is needed, no additional designations are necessary. Please consult the factory for special application requests.

EXAMPLE with Additional Options **6 02 – FFC – P1 – T1 – PM2 – HL5**

Series.....600 hard seat
Connection size..... 1/4" NPT
Valve type.....Female-female, steel
Packing..... PTFE
Stem tip.....Non-rotating
Panel mount.....Panel mount (2 nuts)
Handle.....1-3/4" Phenolic

Dimensions

Male-Female

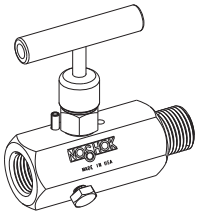

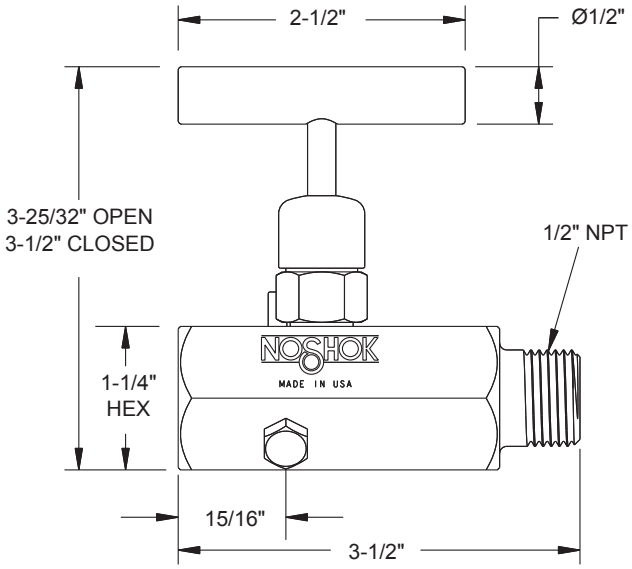

Female-Female

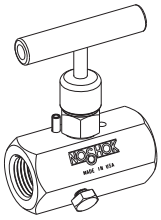

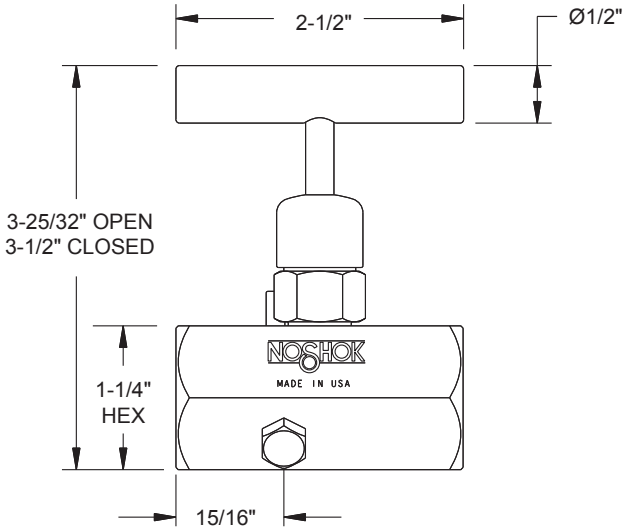

For panel mount and packing dimensions, see pgs. 64-65.

Block & Bleed, Hard Seat

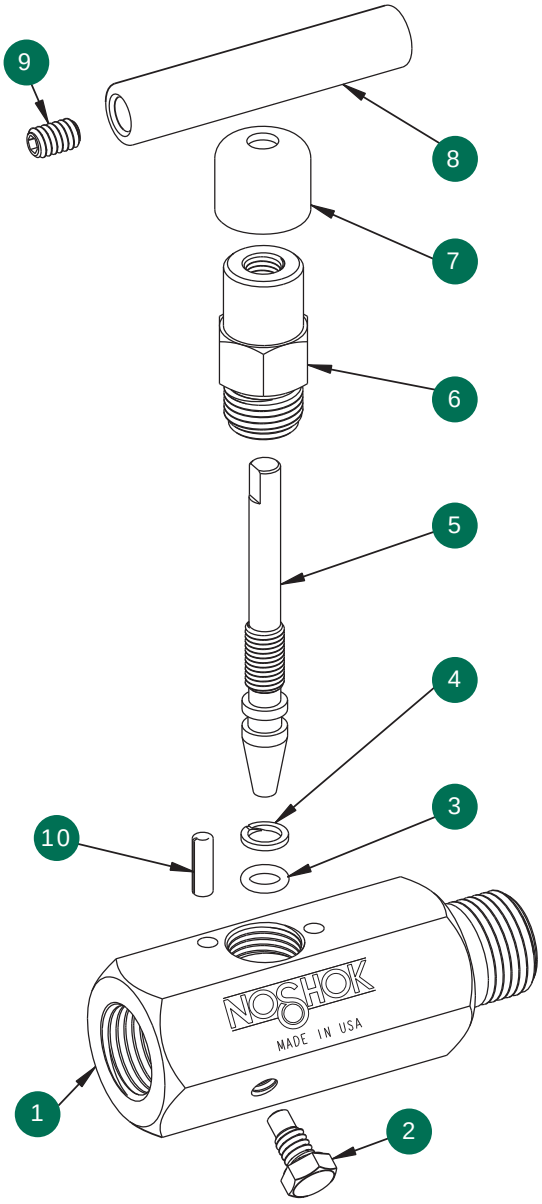

1 Valve body
2 Bleed screw
3 FKM o-ring
4 PTFE back-up ring
5 Valve stem
6 Valve bonnet
7 Dust cap
8 Valve “T” handle
9 Set screw
10 Slotted spring pin

Option With Packing

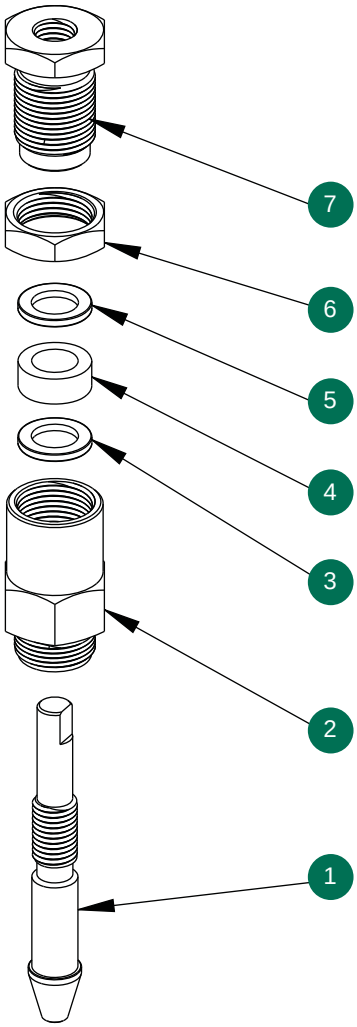

1 Valve packing stem
2 Valve packing bonnet
3 Packing washer
4 Packing
5 Packing washer
6 Jam nut
7 Packing adjustment screw

Block & Bleed, Soft Seat

700 SERIES

- Block & bleed design allows pressure to be bled off without disturbing the permanent piping installation, allowing quick and easy removal or replacement of instruments
- 100% helium leak tested to 1 x 10^{-4} ml/s for guaranteed performance and reliability
- 6,000 psi pressure rating @ 200°F
- Replaceable Delrin® seat and straight through porting for bidirectional, high capacity flow and easy roddable cleaning
- PCTFE or PEEK soft seat optional
- Blow-out proof stem provides a secondary stem seal in the full open position
- FKM o-ring seal and PTFE back-up ring below the stem threads to protect from corrosion and galling; PTFE packing optional
- All stems are 316 stainless steel
- All stem threads are rolled for strength and ease of operation
- One-piece bonnet with a metal-to-metal seal to the valve body below the bonnet threads
- Slotted spring pin to prevent accidental loosening
- Vinyl dust cap for bonnet and stem (non-packing)
- 0.090" bleed hole located on the bottom is controlled by a 1/4"-20 UNF-2A bleed screw

SPECIFICATIONS	
Materials	Zinc-nickel plated steel, electropolished 316 stainless steel
Connections	1/4" & 1/2" NPT Male-female & Female-female configurations
Pressure rating	6,000 psi @ 200°F
Orifice size	0.187"
Flow coefficient	C_V 0.76
Stem seal & type	All 316 stainless steel stems with FKM o-ring and PTFE back-up ring below the threads, PTFE packing optional
Options	Panel mountings, o-ring materials, handles, packings, regulating stem and stem tips

NOTE: All NOSHOK valve products conform to the MSS SP-99 instrument valves standards, and valves supplied with packing also conform to MSS SP-132 compression packing systems for instrument valves standard.

ORDERING INFORMATION				
SERIES	**7**	700 Series, soft seat		
CONNECTION SIZE	**02**	1/4" NPT	**04**	1/2" NPT
VALVE TYPE	**MFC**	Male-Female, Steel	**MFS**	Male-Female, Stainless Steel
	FFC	Female-Female, Steel	**FFS**	Female-Female, Stainless Steel

Please consult your local NOSHOK Distributor or NOSHOK, Inc. for availability and delivery information.

EXAMPLE **702 – FFC**

Series..... 700 soft seat
Connection size ..... 1/4" NPT
Valve type ..... Female-female, steel

To meet all of your specific application requirements, the following additional options are available for these needle valves. To order all or any of these options, simply add them to the part number as shown in the diagram below.

NOTE 1: The example shown includes ALL possible additional options. Please include ONLY the options required for your application when building your part number. (EXAMPLE: 702-FFC-HL5)

NOTE 2: When a packing option is selected, an o-ring option is NOT available.

ORDERING INFORMATION - Additional Options						
SOFT SEATS	**PK1**	PEEK	**KF1**	PCTFE		
PACKINGS	**P1**	PTFE				
STEM TIPS	**T1**	Non-rotating (316 stainless)				
O-RINGS*	**EM1**	EPDM	**KZ1**	FFKM (Kalrez® 3018 or equivalent)	**NB1**	NBR
PANEL MOUNTINGS	**PM1**	Panel mount (1 nut)	**PM2**	Panel mount (2 nuts)		
HANDLES	**HL4**	1-3/8" Phenolic	**HL5**	1-3/4" Phenolic		

Please consult your local NOSHOK Distributor or NOSHOK, Inc. for availability and delivery information.

* Other o-ring materials available on request.

Please note that the standard o-ring in all the NOSHOK valves is FKM and the standard handles are “T” handles (HL2).

The handle material will always match the material of the valve, unless otherwise specified. For example, the “T” handle (HL2) on the 702-FFC will be steel. When only the standard configuration is needed, no additional designations are necessary. Please consult the factory for special application requests.

EXAMPLE with Additional Options **7 02 – FFC – PK1 – T1 – EM1 – PM2 – HL5**

Series..... 700 soft seat
Connection size ..... 1/4" NPT
Valve type ..... Female-female, steel
Soft seat ..... PEEK
Stem tip ..... Non-rotating
O-ring..... EPDM
Panel mount ..... Panel mount (2 nuts)
Handle..... 1-3/4" Phenolic

Dimensions

Male-Female

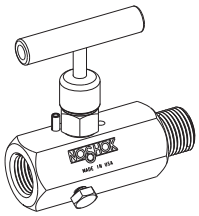

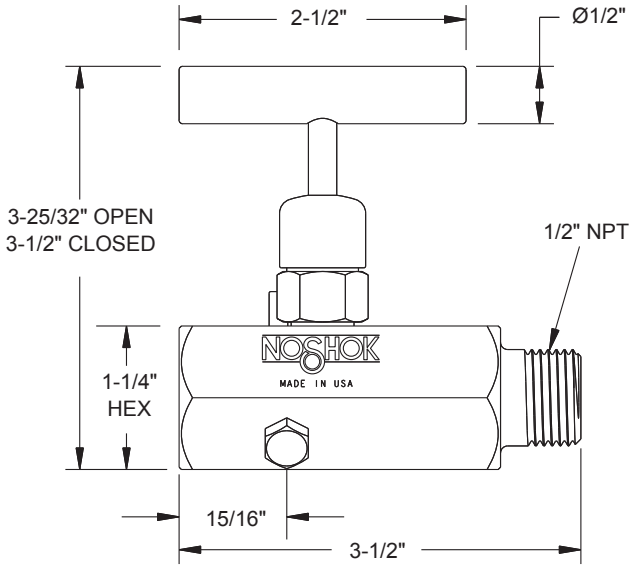

Female-Female

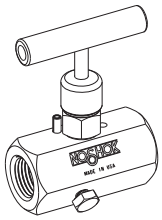

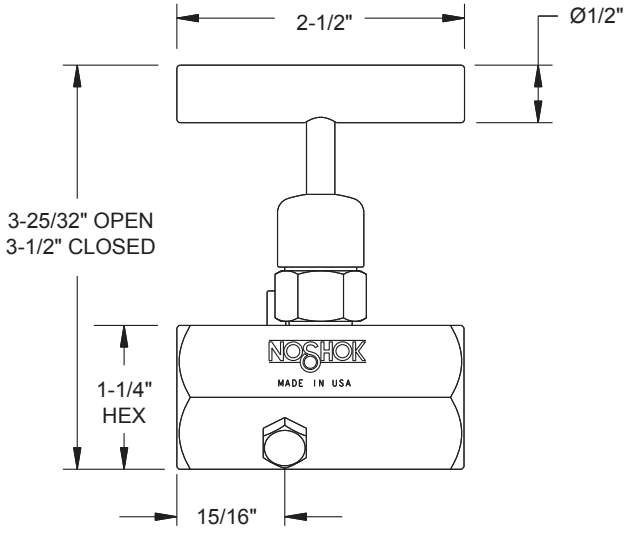

For panel mount and packing dimensions, see pgs. 64-65.

Block & Bleed, Soft Seat

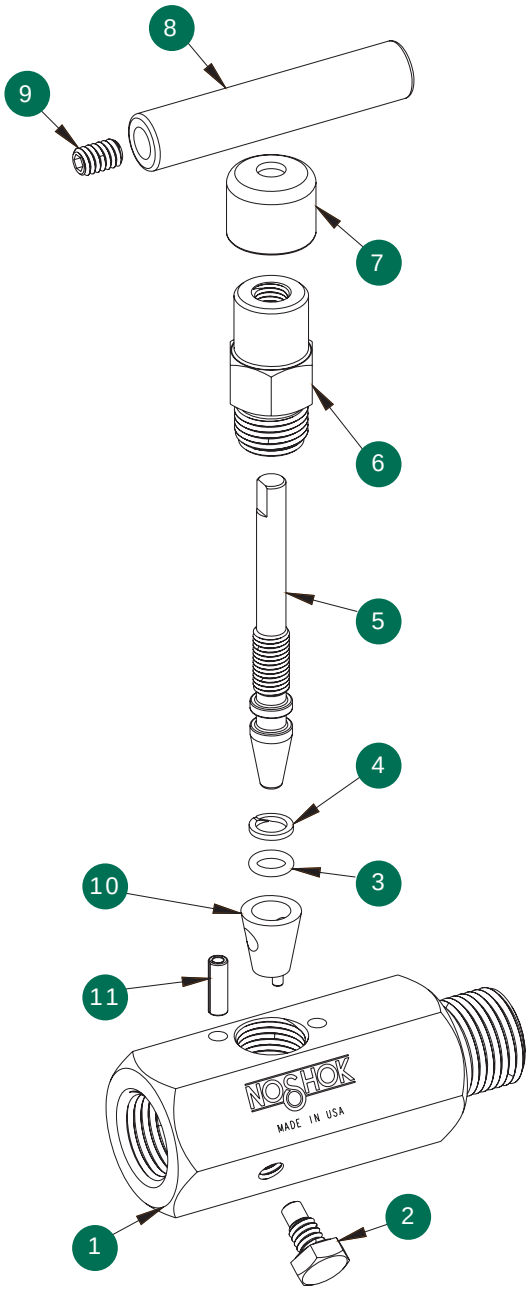

1 Valve body
2 Bleed screw
3 FKM o-ring
4 PTFE back-up ring
5 Valve stem
6 Valve bonnet
7 Dust cap
8 Valve “T” handle
9 Set screw
10 Delrin® seat
11 Slotted spring pin

Option With Packing

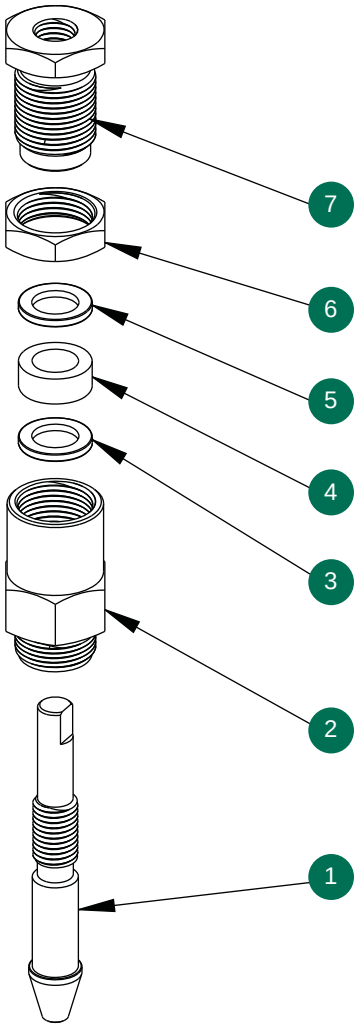

1 Valve packing stem
2 Valve packing bonnet
3 Packing washer
4 Packing
5 Packing washer
6 Jam nut
7 Packing adjustment screw

Bleed, Hard Seat & Soft Tip

800/850 SERIES

- Bleed valves provide a convenient means to relieve process pressures trapped between a shut off valve and the instrument
- Uses the same bonnet assemblies of the 100/150 Series mini valves with an integrated single threaded body for insertion in vent port
- Soft tip valves feature a patented Delrin® non-rotating soft tip stem, and a back-up metal-to-metal seal **(U.S. Patent 6,820,857)**
- 100% helium leak tested to 1 x 10^{-4} ml/s for guaranteed performance and reliability
- 10,000 psi hard seat pressure rating @ 200°F
- Available in zinc-nickel plated steel, electropolished stainless steel, and brass
- FKM o-ring seal and PTFE back-up ring below the stem threads to protect from corrosion and galling; PTFE or Grafoil® (800 Series only) packing optional
- All stems are 316 stainless steel
- All stem threads are rolled for strength and ease of operation
- 0.159" bleed port
- Patented body-to-bonnet, metal-to-metal seal is designed to significantly increase the pressure range of the valve **(U.S. Patent 7,758,014)**

SPECIFICATIONS	
Materials	Zinc-nickel plated steel, electropolished 316 stainless steel, 360 brass
Connections	1/4" & 1/2" NPT
Hard seat pressure ratings	Brass: 6,000 psi @ 200°F Steel: 10,000 psi @ 200°F Stainless steel: 10,000 psi @ 200°F
Soft tip pressure ratings	Brass: 3,000 psi @ 200°F Steel: 6,000 psi @ 200°F Stainless steel: 6,000 psi @ 200°F
Bleed port	0.159"
Stem seal & type	All 316 stainless steel stems with FKM o-ring and PTFE back-up ring below the threads, PTFE or Grafoil® (800 Series only) packing optional
Options	Panel mountings, o-ring materials, handles, packings, regulating stem and stem tips

NOTE: All NOSHOK valve products conform to the MSS SP-99 instrument valves standards, and valves supplied with packing also conform to MSS SP-132 compression packing systems for instrument valves standard.

ORDERING INFORMATION						
SERIES	**8**	800/850 Series, hard seat/soft tip				
CONNECTION SIZE	**02** **04**	Hard seat 1/4" NPT Hard seat 1/2" NPT	**52** **54**	Delrin® soft tip 1/4" NPT Delrin® soft tip 1/2" NPT		
VALVE TYPE	**MC**	Male, Steel	**MS**	Male, Stainless Steel	**MB**	Male, Brass

Please consult your local NOSHOK Distributor or NOSHOK, Inc. for availability and delivery information.

EXAMPLE **8 02 – MC**

Series.....800/850 hard seat/soft tip
Connection size.....Hard seat 1/4" NPT
Valve type.....Male, steel

To meet all of your specific application requirements, the following additional options are available for these needle valves. To order all or any of these options, simply add them to the part number as shown in the diagram below.

NOTE 1: The example shown includes ALL possible additional options. Please include ONLY the options required for your application when building your part number. (EXAMPLE: 802-MC-EM1)

NOTE 2: When a packing option is selected, an o-ring option is NOT available.

ORDERING INFORMATION - Additional Options						
PACKINGS	**P1**	PTFE	**P2**	Grafoil®**		
STEM TIPS	**T1** **T2** **T3**	Non-rotating (316 stainless) Delrin® (Acetal)*** PTCFE***	**T4** **T5** **T6**	PEEK*** Ball (440C stainless)** Ball (carbide)**	**T7** **T8**	Ball (ceramic)** Ball (Monel)**
O-RINGS*	**EM1**	EPDM	**KZ1**	FFKM (Kalrez® 3018 or equivalent)	**NB1**	NBR
HANDLES	**HL2** **HL3**	2-1/2" "T"** 1" Round knurled	**HL4**	1-3/8" Phenolic**	**HL5**	1-3/4" Phenolic**

Please consult your local NOSHOK Distributor or NOSHOK, Inc. for availability and delivery information.

* Other o-ring materials available on request.
** For 800 Series only.
*** For 850 Series only.

Please note that the standard o-ring in all the NOSHOK valves is FKM and the standard handles are 1" round knurled handles (HL3) on brass, and 1-3/8" mini "T" handles (HL7) on stainless steel and steel.

The handle material will always match the material of the valve, unless otherwise specified. For example, the mini "T" handle (HL7) on the 802-MC will be steel. When only the standard configuration is needed, no additional designations are necessary. Please consult the factory for special application requests.

EXAMPLE with Additional Options **8 02 – MC – P1 – T1 – HL5**

Series.....800/850 hard seat/soft tip
Connection size.....Hard seat 1/4" NPT
Valve type.....Male, steel
Packing.....PTFE
Stem tip.....Non-rotating
Handle.....1-3/4" Phenolic

Dimensions

1/4" Bleed Valve

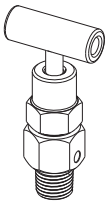

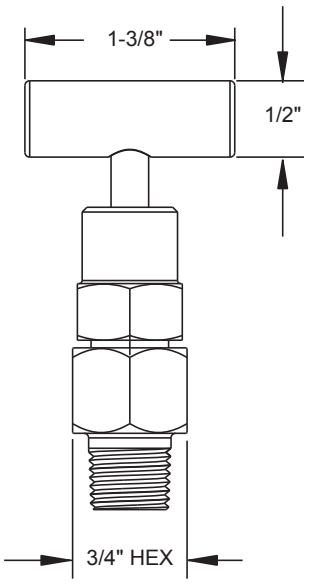

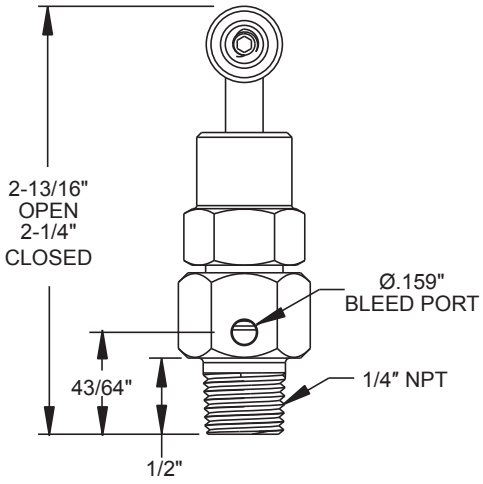

1/2" Bleed Valve

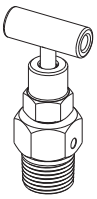

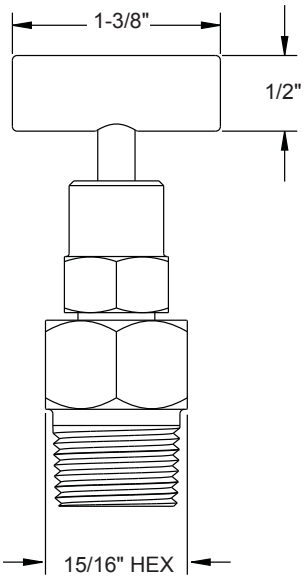

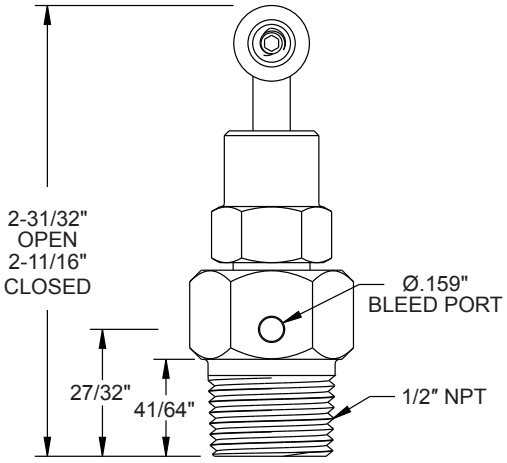

For panel mount and packing dimensions, see pgs. 64-65.

Bleed, Hard Seat

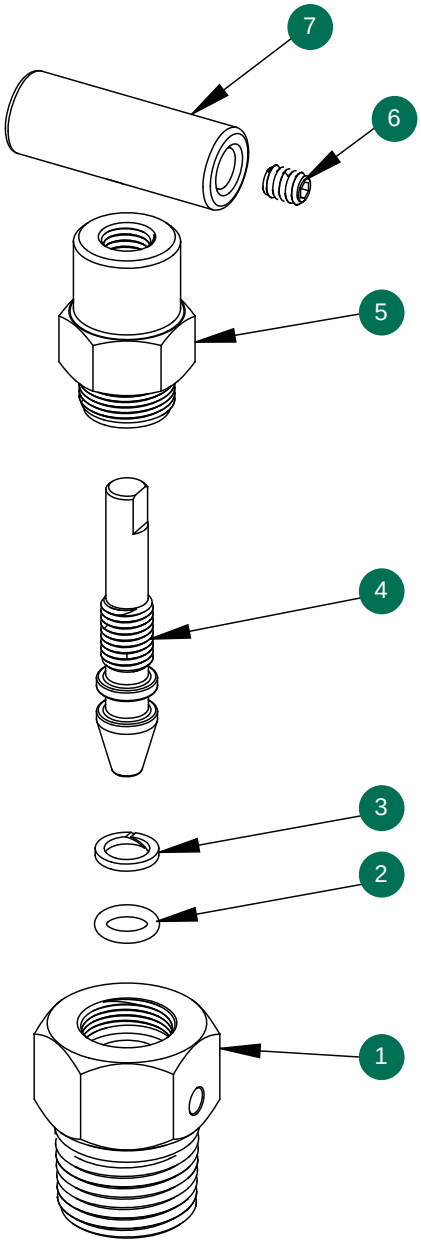

1 Valve body
2 FKM o-ring
3 PTFE back-up ring
4 Mini valve stem
5 Mini valve bonnet
6 Set screw
7 Mini “T” handle

Option With Packing, Hard Seat

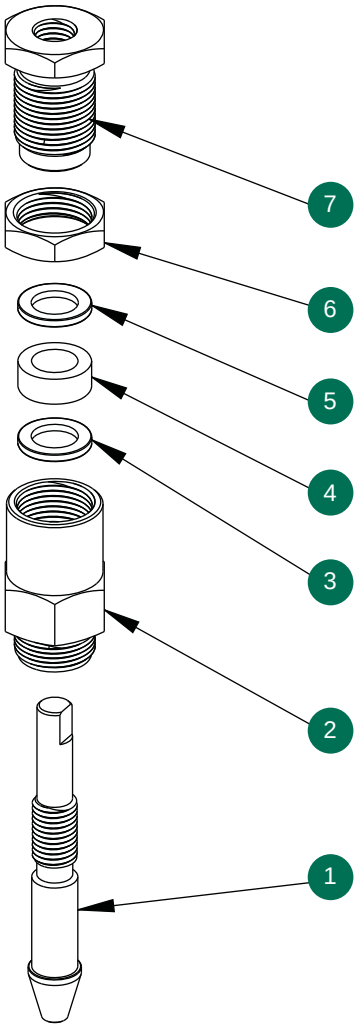

1 Mini valve packing stem
2 Mini valve packing bonnet
3 Packing washer
4 Packing
5 Packing washer
6 Jam nut
7 Packing adjustment screw

Option With Packing, Soft Tip

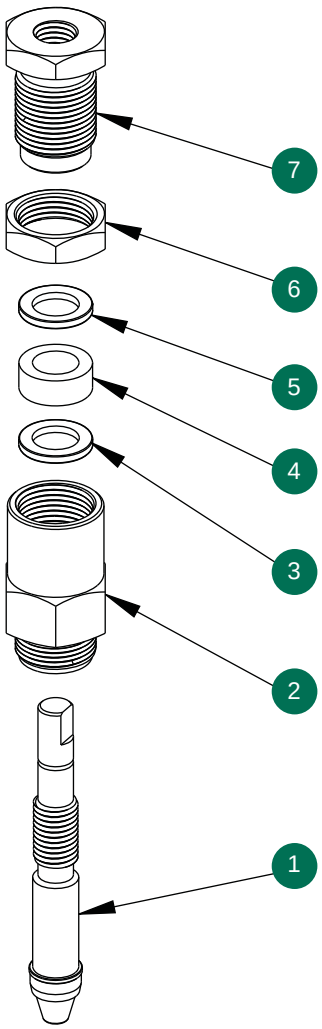

1 Soft tip packing stem
2 Mini valve packing bonnet
3 Packing washer
4 Packing
5 Packing washer
6 Jam nut
7 Packing adjustment screw

Block & Bleed, Hard Seat

2070 SERIES

- Combines isolating and venting in a single valve, eliminating the need for tubing and fittings
- Block valve isolates the downstream process fluids, and the bleed valve exhausts upstream fluids enabling instruments to be removed without disturbing the permanent piping installation
- The 1/4" NPT vent plug is located 90° to the left and may be removed and replaced with exhaust piping to direct the fluids to a safe location
- 100% helium leak tested to 1 x 10^{-4} ml/s for guaranteed performance and reliability
- 10,000 psi hard seat pressure rating @ 200°F
- Blow-out proof stem provides a secondary stem seal in the full open position
- FKM o-ring seal and PTFE back-up ring below the stem threads to protect from corrosion and galling; PTFE or Grafoil® packing optional
- All stems are 316 stainless steel
- All stem threads are rolled for strength and ease of operation
- One-piece bonnet with a metal-to-metal seal to the valve body below the bonnet threads
- Slotted spring pin to prevent accidental loosening
- Vinyl dust cap for bonnet and stem (non-packing)

Flow Schematic

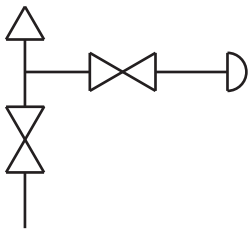

SPECIFICATIONS	
Materials	Zinc-nickel plated steel, electropolished 316 stainless steel
Connection	1/2" & 1/4" NPT Male-female & Female-female configurations available, right venting optional
Pressure rating	10,000 psi @ 200°F
Orifice size	0.187"
Flow coefficient	C_V 0.44
Stem seal & type	All 316 stainless steel stems with FKM o-ring and PTFE back-up ring below the threads, PTFE or Grafoil® packing optional
Length	4" standard and 5-3/8" extended length available
Options	Panel mountings, o-ring materials, handles, packings, regulating stem and stem tips

NOTE: All NOSHOK valve products conform to the MSS SP-99 instrument valves standards, and valves supplied with packing also conform to MSS SP-132 compression packing systems for instrument valves standard.

ORDERING INFORMATION						
SERIES	**2** 2-valve					
SEAT	**0** Hard seat					
PROCESS CONNECTION	**7** Block & bleed					
CONNECTION SIZE	**0** 1/2" NPT		**2** 1/4" NPT			
VALVE TYPE	**MFC** Male-Female, Steel		**FMC** Female-Male, Steel		**FFCR** Female-Female, Steel, Right Vent	
	MFCR Male-Female, Steel, Right Vent		**EFMC** Extended Female-Male, Steel		**EFFC** Extended Female-Female, Steel	
	EMFC Extended Male-Female, Steel		**FMS** Female-Male, Stainless Steel		**FFS** Female-Female, Stainless Steel	
	MFS Male-Female, Stainless Steel		**EFMS** Extended Female-Male, Stainless Steel		**FFSR** Female-Female, Stainless Steel, Right Vent	
	MFSR Male-Female, Stainless Steel, Right Vent		**FFC** Female-Female, Steel		**EFFS** Extended Female-Female, Stainless Steel	
	EMFS Extended Male-Female, Stainless Steel					

Please consult your local NOSHOK Distributor or NOSHOK, Inc. for availability and delivery information.

EXAMPLE **2 0 7 0 – FFC**

Series.....2-valve
Seat.....Hard seat
Process connection.....Block & bleed
Connection size.....1/2" NPT
Valve type.....Female-female, steel

To meet all of your specific application requirements, the following additional options are available for these needle valves. To order all or any of these options, simply add them to the part number as shown in the diagram below.

NOTE 1: The example shown includes ALL possible additional options. Please include ONLY the options required for your application when building your part number. (EXAMPLE: 2070-FFC-HL5)

NOTE 2: When a packing option is selected, an o-ring option is NOT available.

ORDERING INFORMATION - Additional Options						
PACKINGS	**P1** PTFE		**P2** Grafoil®			
STEM TIPS	**T1** Non-rotating (316 stainless)		**T6** Ball (carbide)		**T8** Ball (Monel)	
	T5 Ball (440C stainless)		**T7** Ball (ceramic)		**T9** Regulating hard	
O-RINGS*	**EM1** EPDM		**KZ1** FFKM (Kalrez® 3018 or equivalent)		**NB1** NBR	
HANDLES	**HL1** 1-13/16" Mini "T"		**HL3** 1" Round knurled		**HL5** 1-3/4" Phenolic	
	HL2 2-1/2" "T"		**HL4** 1-3/8" Phenolic			

Please consult your local NOSHOK Distributor or NOSHOK, Inc. for availability and delivery information.

* Other o-ring materials available on request.

Please note that the standard o-ring in all the NOSHOK valves is FKM and the standard handles are block "T" handles (HL2) and bleed mini "T" handles (HL1).

The handle material will always match the material of the valve, unless otherwise specified. For example, the "T" handle (HL2) on the 2070-FFC will be steel. When only the standard configuration is needed, no additional designations are necessary. Please consult the factory for special application requests.

EXAMPLE with Additional Options **2 0 7 0 – FFC – P1 – T1 – HL3**

Series.....2-valve
Seat.....Hard seat
Process connection.....Block & bleed
Connection size.....1/2" NPT
Valve type.....Female-female, steel
Packing.....PTFE
Stem tip.....Non-rotating
Handle.....1" Round knurled

Dimensions

Male-Female

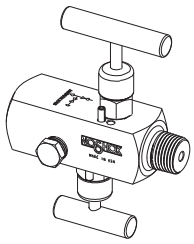

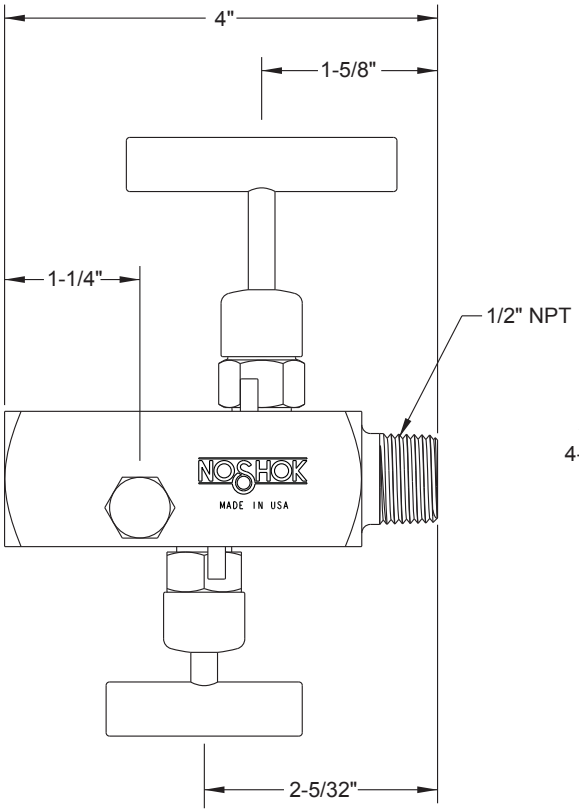

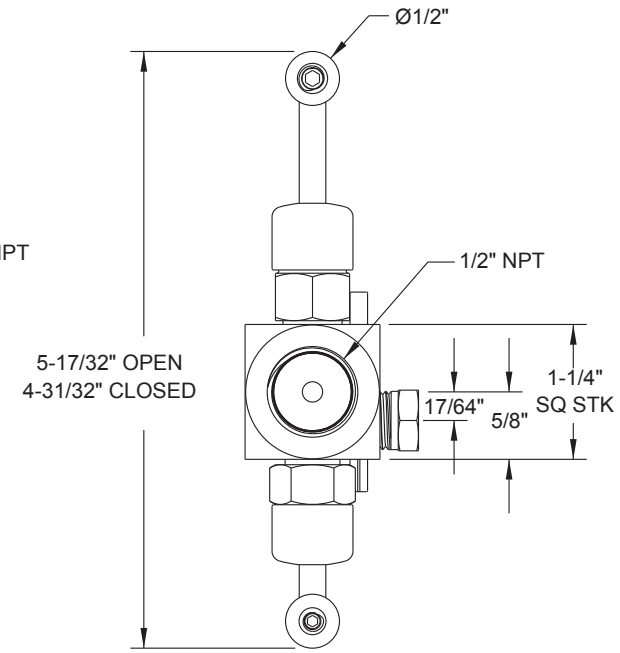

Extended Male-Female

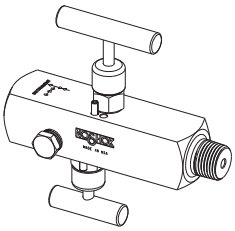

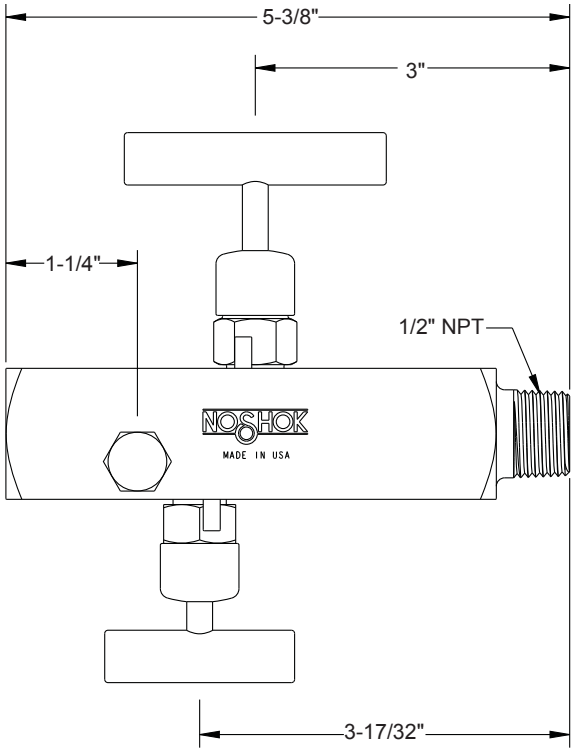

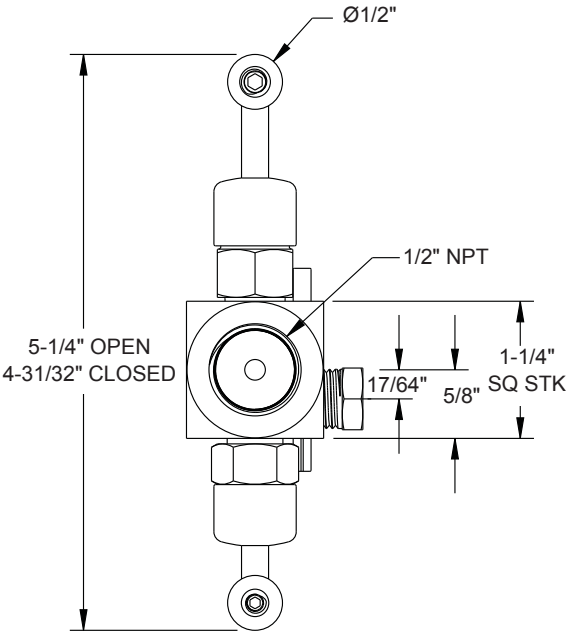

For panel mount and packing dimensions, see pgs. 64-65.

Block & Bleed, Hard Seat

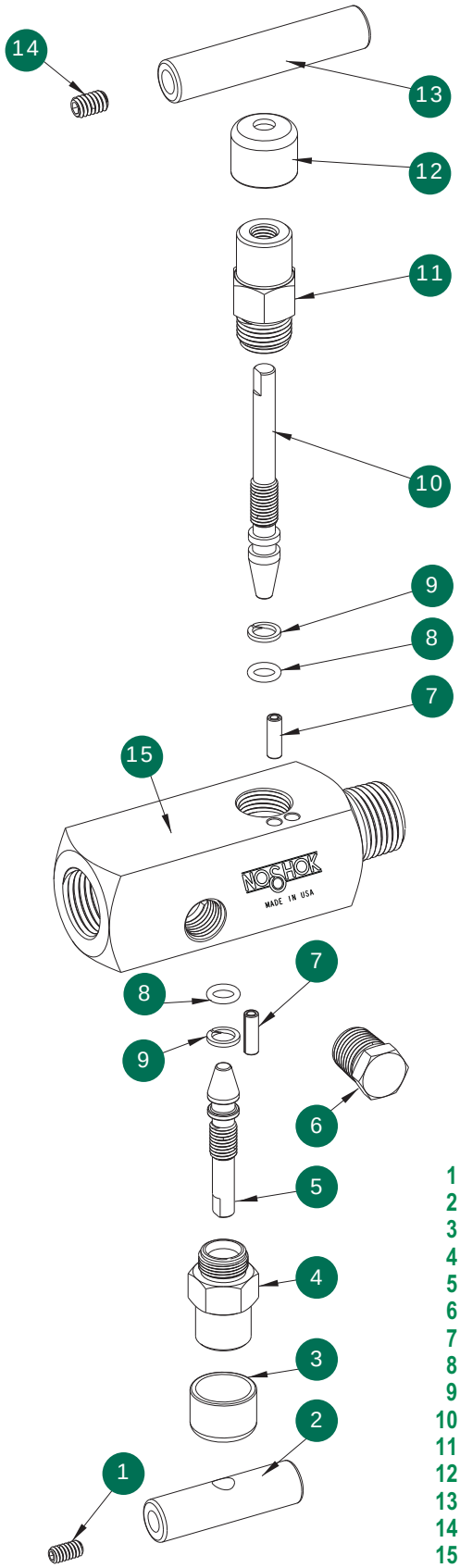

1 Set screw
2 Mini valve “T” handle
3 Red dust cap
4 Mini valve bonnet
5 Mini valve stem
6 Plug
7 Slotted spring pin
8 FKM o-ring
9 PTFE back-up ring
10 Valve stem
11 Valve bonnet
12 Blue dust cap
13 Valve “T” handle
14 Set screw
15 Block and bleed valve body

Option With Packing

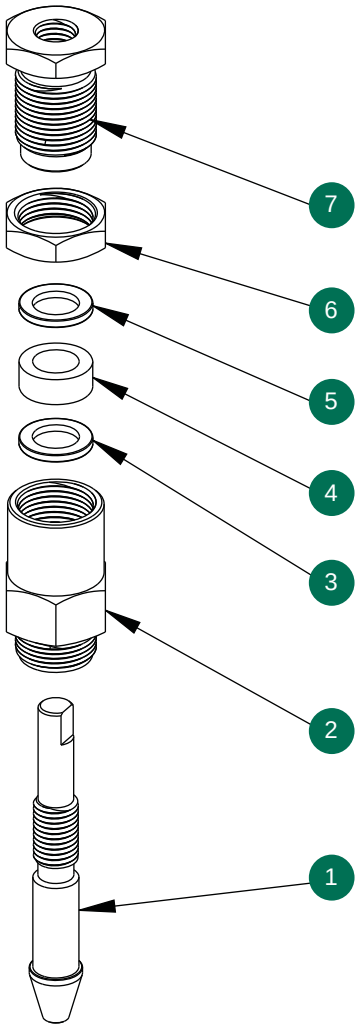

1 Mini valve packing stem and valve packing stem
2 Mini valve packing bonnet and valve packing bonnet
3 Packing washer
4 Packing
5 Packing washer
6 Jam nut
7 Packing adjustment screw

Block & Bleed, Soft Seat

2170 SERIES

- Combines isolating and venting in a single valve, eliminating the need for tubing and fittings
- Block valve isolates the downstream process fluids and the bleed valve exhausts upstream fluids enabling instruments to be removed without disturbing the permanent piping installation
- The 1/4" NPT vent plug is located 90° to the left and may be removed and replaced with exhaust piping to direct the fluids to a safe location
- 100% helium leak tested to 1 x 10^{-4} ml/s for guaranteed performance and reliability
- 6,000 psi pressure rating @ 200°F
- Replaceable Delrin® seat, and straight through porting for bidirectional, high capacity flow and easy roddable cleaning
- PCTFE or PEEK soft seat optional
- Blow-out proof stem provides a secondary stem seal in the full open position
- FKM o-ring seal and PTFE back-up ring below the stem threads to protect from corrosion and galling; PTFE packing optional
- All stems are 316 stainless steel
- All stem threads are rolled for strength and ease of operation
- One-piece bonnet with a metal-to-metal seal to the valve body below the bonnet threads
- Slotted spring pin to prevent accidental loosening
- Vinyl dust cap for bonnet and stem (non-packing)

Flow Schematic

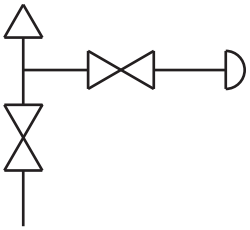

SPECIFICATIONS	
Materials	Zinc-nickel plated steel, electropolished 316 stainless steel
Connection	1/2" & 1/4" NPT Male-female & Female-female configurations available, right venting optional
Pressure rating	6,000 psi @ 200°F
Orifice size	0.187"
Flow coefficient	C_V 0.76
Stem seal & type	All 316 stainless steel stems with FKM o-ring and PTFE back-up ring below the threads, PTFE packing optional
Length	4" standard and 5-3/8" extended length available
Options	Panel mountings, o-ring materials, handles, packings, regulating stem and stem tips

NOTE: All NOSHOK valve products conform to the MSS SP-99 instrument valves standards, and valves supplied with packing also conform to MSS SP-132 compression packing systems for instrument valves standard.

ORDERING INFORMATION						
SERIES	**2** 2-valve					
SEAT	**1** Soft seat					
PROCESS CONNECTION	**7** Block & bleed					
CONNECTION SIZE	**0** 1/2" NPT		**2** 1/4" NPT			
VALVE TYPE	**MFC** Male-Female, Steel		**FMC** Female-Male, Steel		**FFCR** Female-Female, Steel, Right Vent	
	MFCR Male-Female, Steel, Right Vent		**EFMC** Extended Female-Male, Steel		**EFFC** Extended Female-Female, Steel	
	EMFC Extended Male-Female, Steel		**FMS** Female-Male, Stainless Steel		**FFS** Female-Female, Stainless Steel	
	MFS Male-Female, Stainless Steel		**EFMS** Extended Female-Male, Stainless Steel		**FFSR** Female-Female, Stainless Steel, Right Vent	
	MFSR Male-Female, Stainless Steel, Right Vent		**FFC** Female-Female, Steel		**EFFS** Extended Female-Female, Stainless Steel	
	EMFS Extended Male-Female, Stainless Steel					

Please consult your local NOSHOK Distributor or NOSHOK, Inc. for availability and delivery information.

EXAMPLE **2 1 7 0 – FFC**

Series.....2-valve
Seat.....Soft seat
Process connection..... Block & bleed
Connection size .....1/2" NPT
Valve type ..... Female-female, steel

To meet all of your specific application requirements, the following additional options are available for these needle valves. To order all or any of these options, simply add them to the part number as shown in the diagram below.

NOTE 1: The example shown includes ALL possible additional options. Please include ONLY the options required for your application when building your part number. (EXAMPLE: 2170-FFC-PK1)

NOTE 2: When a packing option is selected, an o-ring option is NOT available.

ORDERING INFORMATION - Additional Options						
SOFT SEATS	**PK1** PEEK		**KF1** PCTFE			
PACKINGS	**P1** PTFE					
STEM TIPS	**T1** Non-rotating (316 stainless)					
O-RINGS*	**EM1** EPDM		**KZ1** FFKM (Kalrez® 3018 or equivalent)		**NB1** NBR	
HANDLES	**HL1** 1-13/16" Mini "T"		**HL3** 1" Round knurled		**HL5** 1-3/4" Phenolic	
	HL2 2-1/2" "T"		**HL4** 1-3/8" Phenolic			

Please consult your local NOSHOK Distributor or NOSHOK, Inc. for availability and delivery information.

* Other o-ring materials available on request.

Please note that the standard o-ring in all the NOSHOK valves is FKM and the standard handles are block "T" handles (HL2) and bleed mini "T" handles (HL1).

The handle material will always match the material of the valve, unless otherwise specified. For example, the "T" handle (HL2) on the 2170-FFC will be steel. When only the standard configuration is needed, no additional designations are necessary. Please consult the factory for special application requests.

EXAMPLE with Additional Options **2 1 7 0 – FFC – PK1 – P1 – T1**

Series.....2-valve
Seat.....Soft seat
Process connection..... Block & bleed
Connection size .....1/2" NPT
Valve type ..... Female-female, steel
Soft seat ..... PEEK
Packing.....PTFE
Stem tip ..... Non-rotating

Dimensions

Male-Female

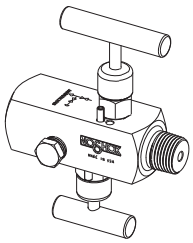

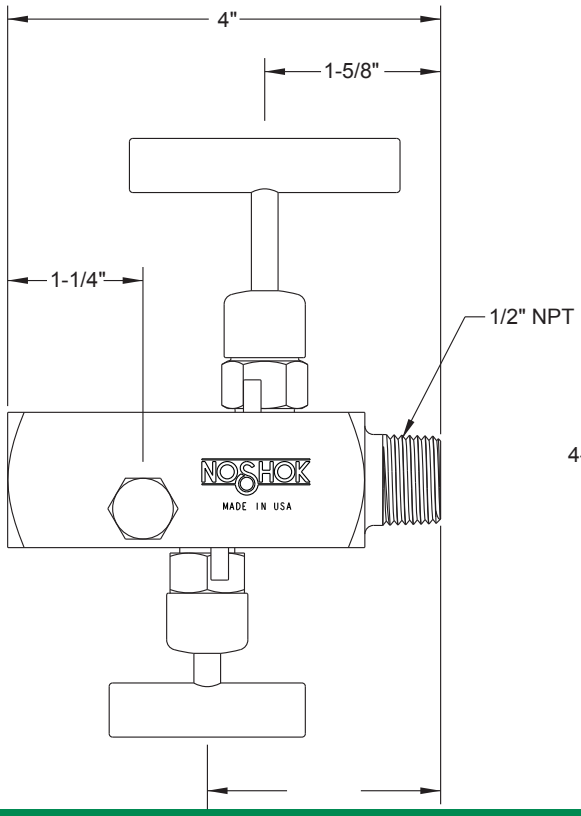

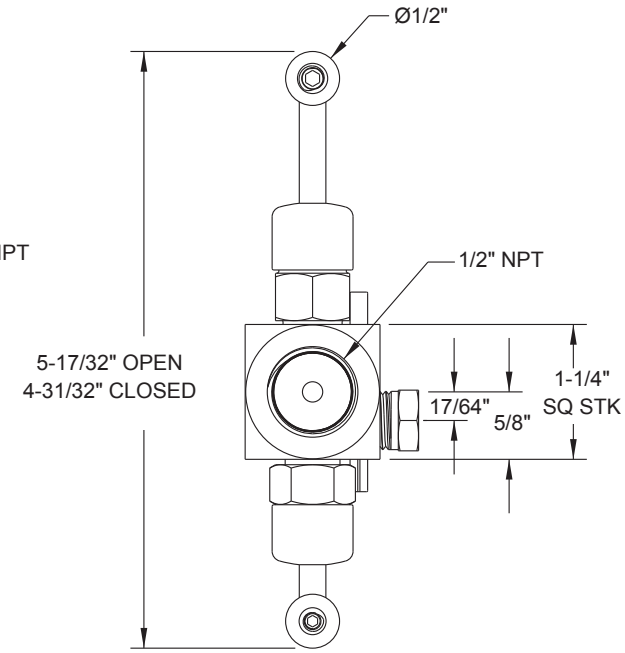

Extended Male-Female

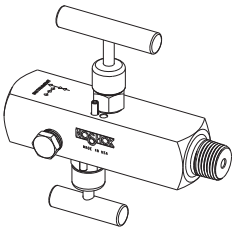

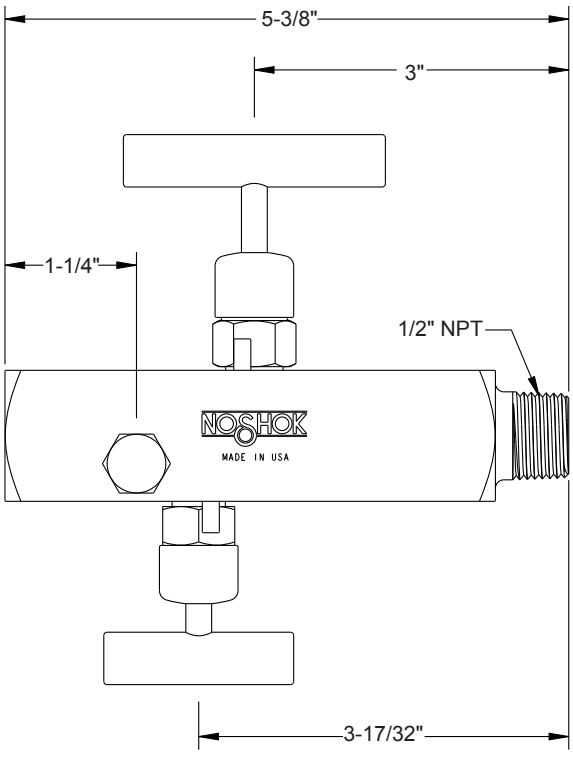

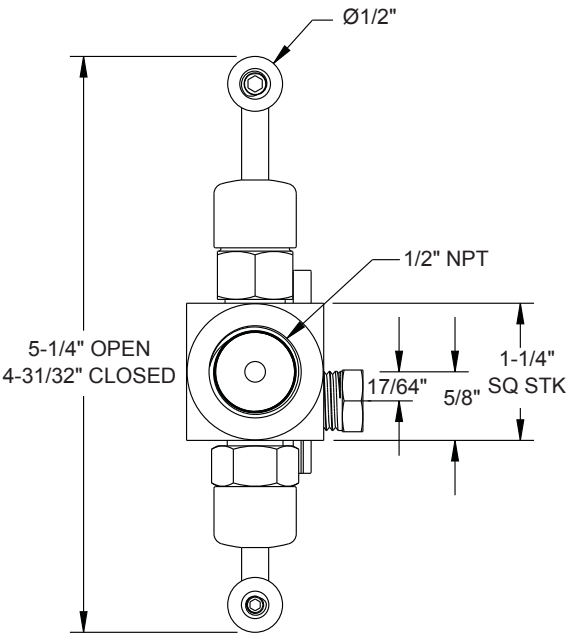

For panel mount and packing dimensions, see pgs. 64-65.

Block & Bleed, Soft Seat

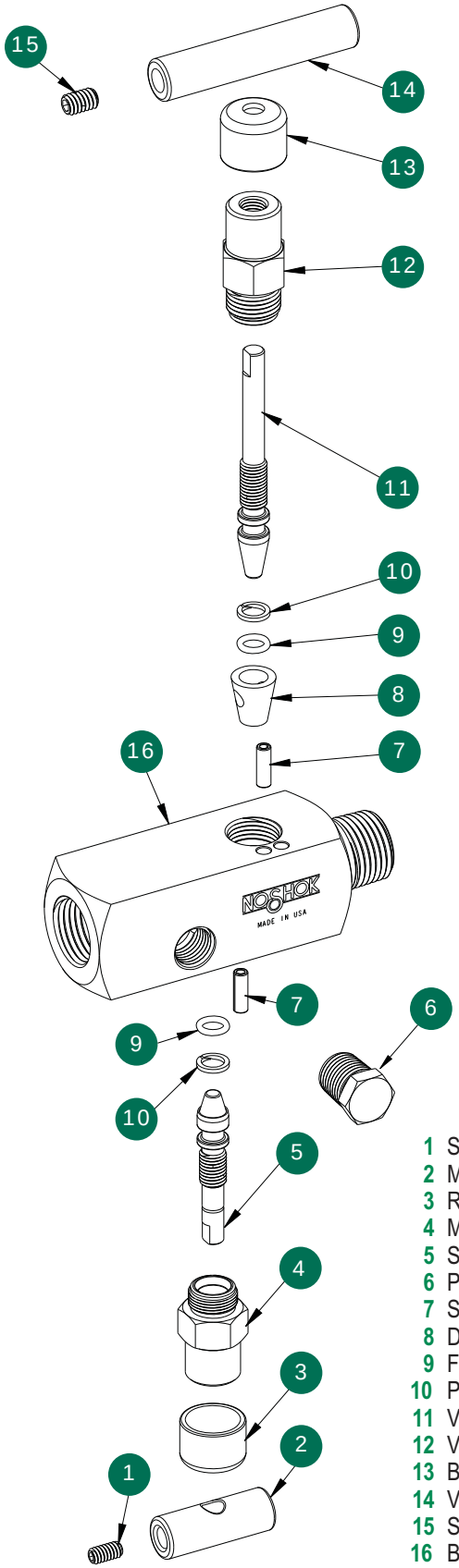

1 Set screw
2 Mini valve “T” handle
3 Red dust cap
4 Mini valve bonnet
5 Soft tip stem
6 Plug
7 Slotted spring pin
8 Delrin® seat
9 FKM o-ring
10 PTFE back-up ring
11 Valve stem
12 Valve bonnet
13 Blue dust cap
14 Valve “T” handle
15 Set screw
16 Block and bleed valve body

Option With Packing

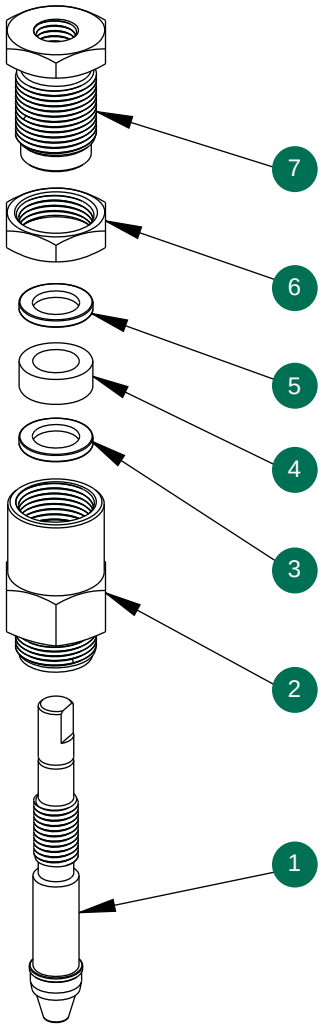

1 Soft tip packing stem and valve packing stem
2 Mini valve packing bonnet and valve packing bonnet
3 Packing washer
4 Packing
5 Packing washer
6 Jam nut
7 Packing adjustment screw

Double Block & Bleed, Hard Seat

3070 SERIES

- Combines isolating and venting in a single valve, eliminating the need for tubing and fittings
- Block valve isolates the downstream process fluids, and the bleed valve exhausts upstream fluids enabling instruments to be removed without disturbing the permanent piping installation on the bottom
- The 1/4" NPT vent plug is located 90° to the left and may be removed and replaced with exhaust piping to direct the fluids to a safe location
- 100% helium leak tested to 1 x 10^{-4} ml/s for guaranteed performance and reliability
- 10,000 psi hard seat pressure rating @ 200°F
- Blow-out proof stem provides a secondary stem seal in the full open position
- FKM o-ring seal and PTFE back-up ring below the stem threads to protect from corrosion and galling; PTFE or Grafoil® packing optional
- All stems are 316 stainless steel
- All stem threads are rolled for strength and ease of operation
- One-piece bonnet with a metal-to-metal seal to the valve body below the bonnet threads
- Slotted spring pin to prevent accidental loosening
- Vinyl dust cap for bonnet and stem (non-packing)

Flow Schematic

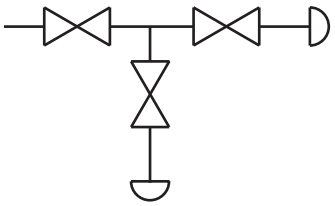

SPECIFICATIONS	
Materials	Zinc-nickel plated steel, electropolished 316 stainless steel
Connection	1/2" & 1/4" NPT Male-female & Female-female configurations available, right venting optional
Pressure rating	10,000 psi @ 200°F
Orifice size	0.187"
Flow coefficient	C_V 0.44
Stem seal & type	All 316 stainless steel stems with FKM o-ring and PTFE back-up ring below the threads, PTFE or Grafoil® packing optional
Length	4" standard and 5-3/8" extended length available
Options	Panel mountings, o-ring materials, handles, packings, regulating stem and stem tips

NOTE: All NOSHOK valve products conform to the MSS SP-99 instrument valves standards, and valves supplied with packing also conform to MSS SP-132 compression packing systems for instrument valves standard.

ORDERING INFORMATION						
SERIES	**3** 3-valve					
SEAT	**0** Hard seat					
PROCESS CONNECTION	**7** Block & bleed					
CONNECTION SIZE	**0** 1/2" NPT		**2** 1/4" NPT			
VALVE TYPE	**MFC** Male-Female, Steel		**FMC** Female-Male, Steel		**FFCR** Female-Female, Steel, Right Vent	
	MFCR Male-Female, Steel, Right Vent		**EFMC** Extended Female-Male, Steel		**EFFC** Extended Female-Female, Steel	
	EMFC Extended Male-Female, Steel		**FMS** Female-Male, Stainless Steel		**FFS** Female-Female, Stainless Steel	
	MFS Male-Female, Stainless Steel		**EFMS** Extended Female-Male, Stainless Steel		**FFSR** Female-Female, Stainless Steel, Right Vent	
	MFSR Male-Female, Stainless Steel, Right Vent		**FFC** Female-Female, Steel		**EFFS** Extended Female-Female, Stainless Steel	
	EMFS Extended Male-Female, Stainless Steel					

Please consult your local NOSHOK Distributor or NOSHOK, Inc. for availability and delivery information.

EXAMPLE **3 0 7 0 – FFC**

Series.....3-valve
Seat.....Hard seat
Process connection.....Block & bleed
Connection size.....1/2" NPT
Valve type.....Female-female, steel

To meet all of your specific application requirements, the following additional options are available for these needle valves. To order all or any of these options, simply add them to the part number as shown in the diagram below.

NOTE 1: The example shown includes ALL possible additional options. Please include ONLY the options required for your application when building your part number. (EXAMPLE: 3070-FFC-HL5)

NOTE 2: When a packing option is selected, an o-ring option is NOT available.

ORDERING INFORMATION - Additional Options						
PACKINGS	**P1** PTFE		**P2** Grafoil®			
STEM TIPS	**T1** Non-rotating (316 stainless)		**T6** Ball (carbide)		**T8** Ball (Monel)	
	T5 Ball (440C stainless)		**T7** Ball (ceramic)		**T9** Regulating hard	
O-RINGS*	**EM1** EPDM		**KZ1** FFKM (Kalrez® 3018 or equivalent)		**NB1** NBR	
HANDLES	**HL1** 1-13/16" Mini "T"		**HL3** 1" Round knurled		**HL5** 1-3/4" Phenolic	
	HL2 2-1/2" "T"		**HL4** 1-3/8" Phenolic			

Please consult your local NOSHOK Distributor or NOSHOK, Inc. for availability and delivery information.

* Other o-ring materials available on request.

Please note that the standard o-ring in all the NOSHOK valves is FKM and the standard handles are block "T" handles (HL2) and bleed mini "T" handles (HL1).

The handle material will always match the material of the valve, unless otherwise specified. For example, the "T" handle (HL2) on the 3070-FFC will be steel. When only the standard configuration is needed, no additional designations are necessary. Please consult the factory for special application requests.

EXAMPLE with Additional Options **3 0 7 0 – FFC – P1 – T1 – HL3**

Series.....3-valve
Seat.....Hard seat
Process connection.....Block & bleed
Connection size.....1/2" NPT
Valve type.....Female-female, steel
Packing.....PTFE
Stem tip.....Non-rotating
Handle.....1" Round knurled

Dimensions

Male-Female

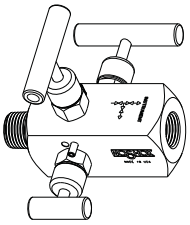

Top View

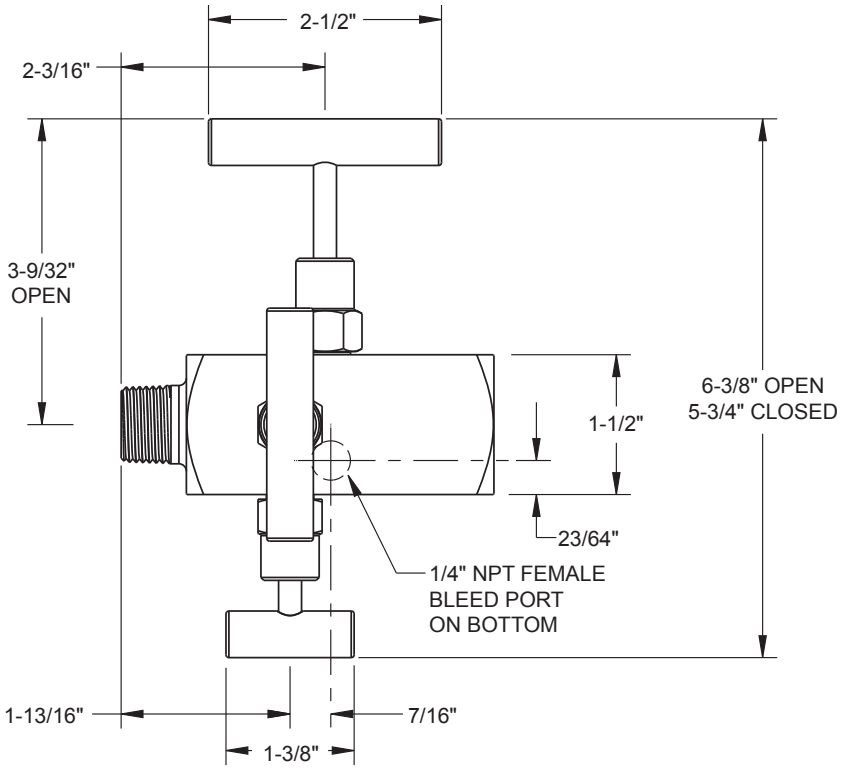

Front View

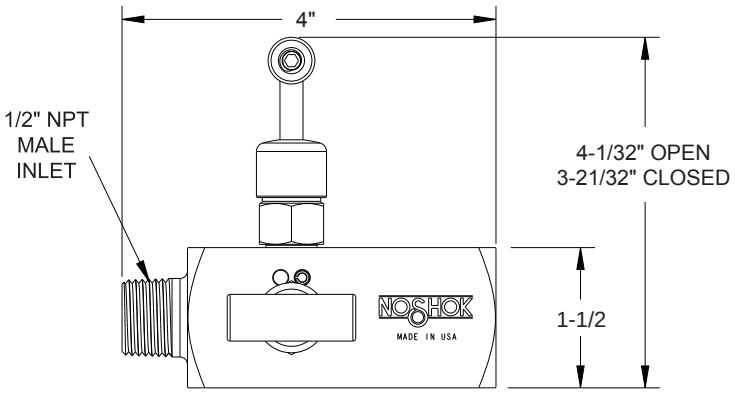

Side View

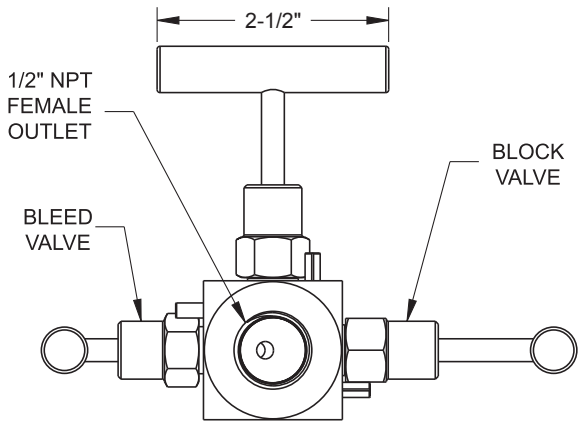

For panel mount and packing dimensions, see pgs. 64-65.

Double Block & Bleed, Hard Seat

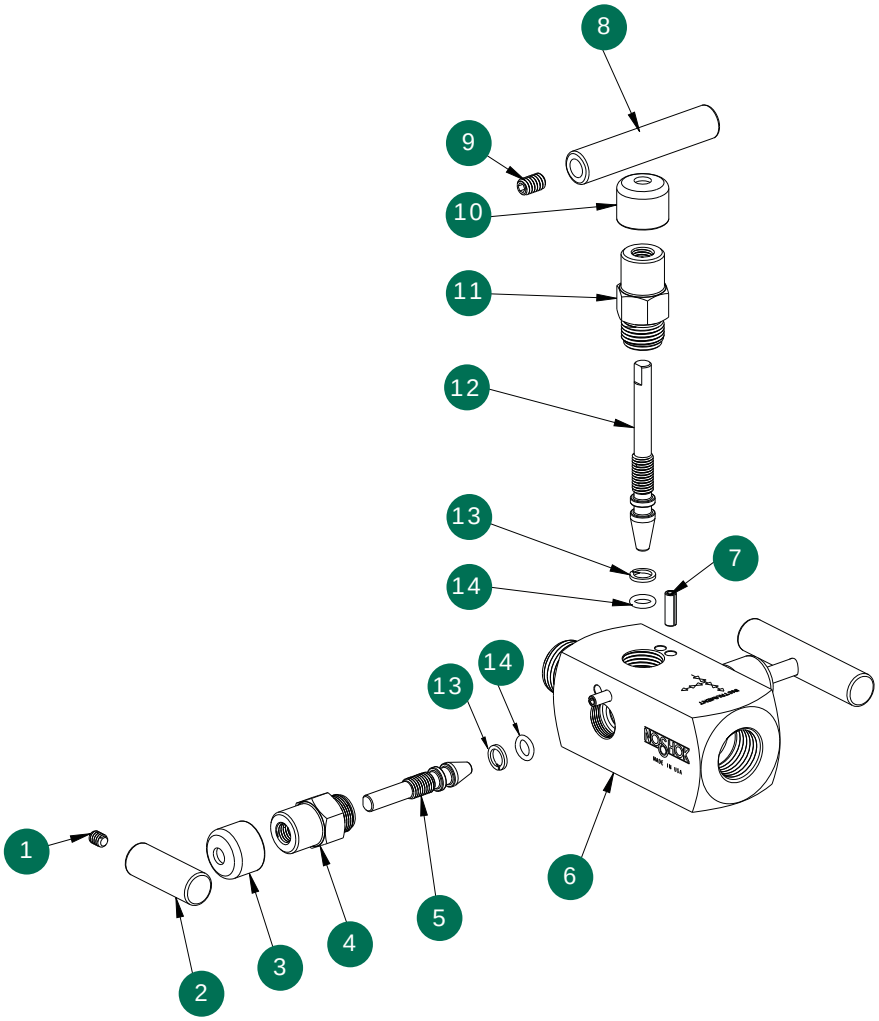

1 Set screw
2 Mini valve “T” handle
3 Red dust cap
4 Mini valve bonnet
5 Mini valve stem
6 Valve body
7 Slotted spring pin
8 Valve “T” handle
9 Set screw
10 Blue dust cap
11 Valve bonnet
12 Valve stem
13 PTFE back-up ring
14 FKM o-ring

Option With Packing

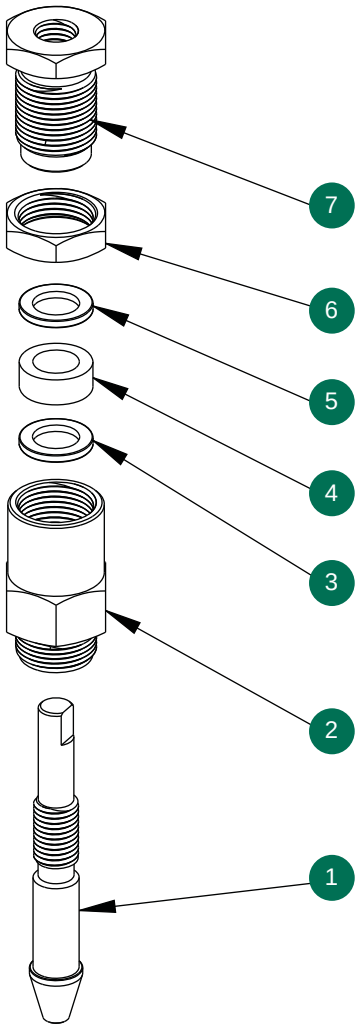

1 Mini valve packing stem and valve packing stem
2 Mini valve packing bonnet and valve packing bonnet
3 Packing washer
4 Packing
5 Packing washer
6 Jam nut
7 Packing adjustment screw

Needle Valve Options

Knurled Handle HL3

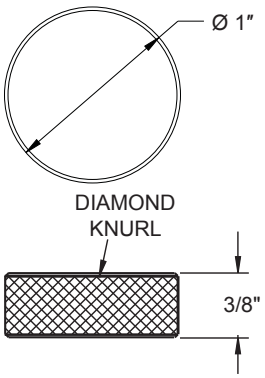

PART NUMBER	MATERIAL
HL3-CS1-ZN1	Steel
HL3-SS1-EP	Stainless steel
HL3-BR1	Brass

Phenolic Handle HL4

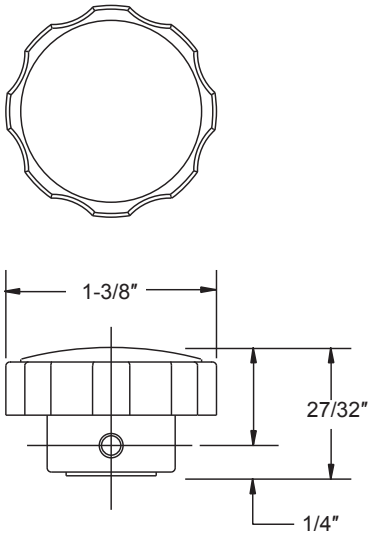

PART NUMBER	MATERIAL
HL4-PH1	Phenolic

Phenolic Handle HL5

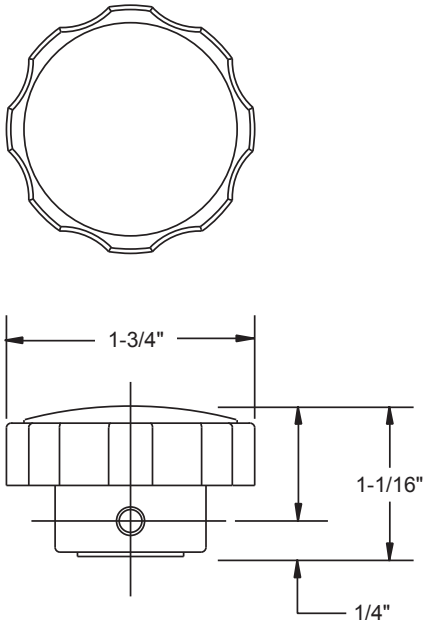

PART NUMBER	MATERIAL
HL5-PH1	Phenolic

Phenolic Handle HL9

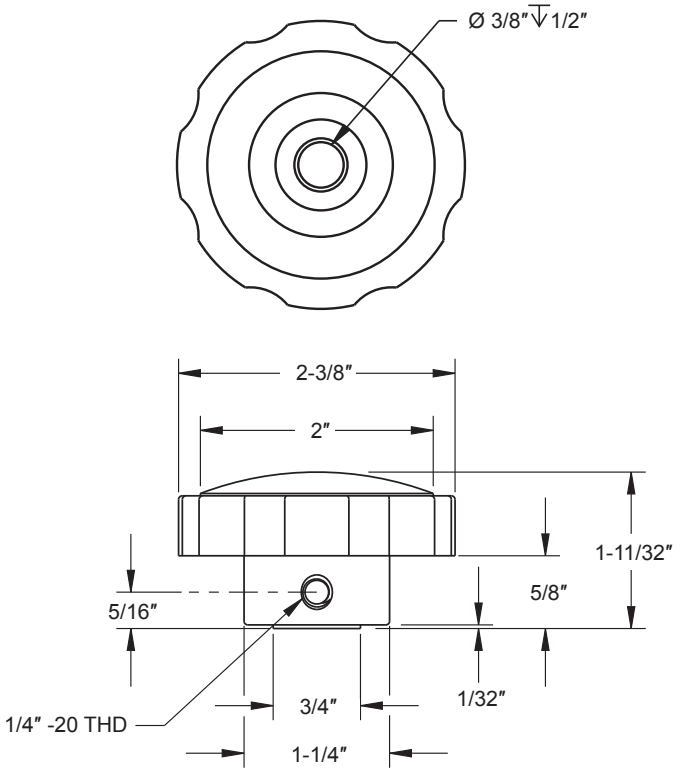

PART NUMBER	MATERIAL
HL9-PH1	Phenolic

Panel Mount Detail, Mini Valves

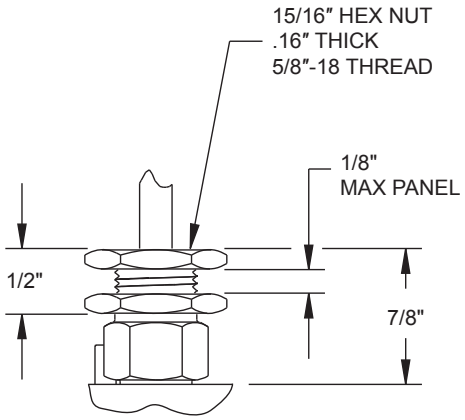

Panel Mount Detail, Needle Valves

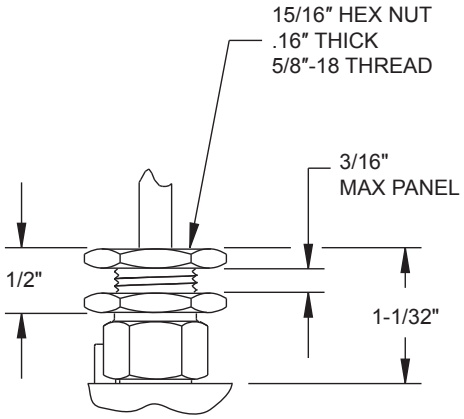

Plug

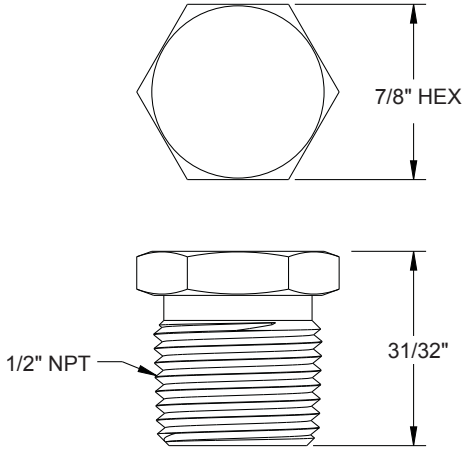

Bleed Plug

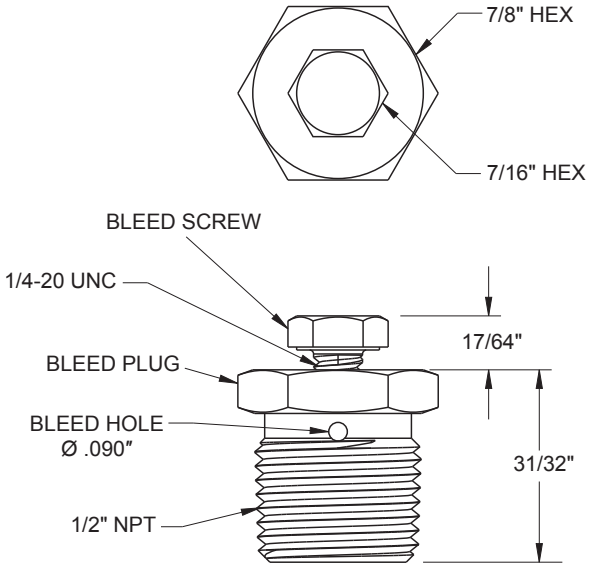

Bleed Screw

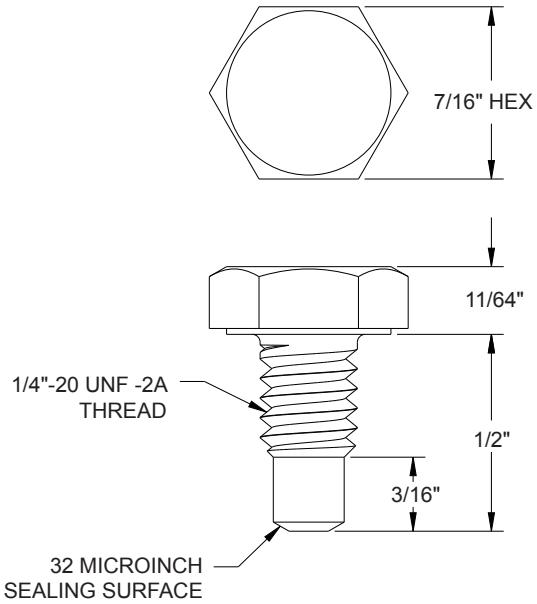

Packing, Mini Valves

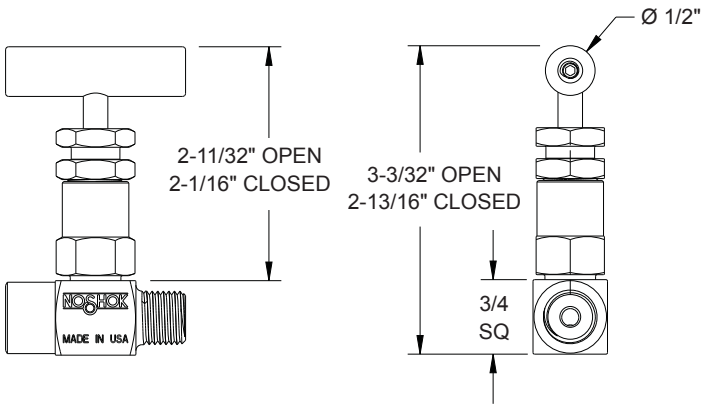

Packing, Needle Valves

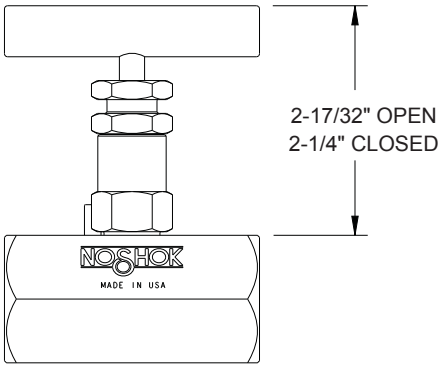

Block & Bleed, Hard Seat & Soft Seat

2000/2100 SERIES

Note: Packing option shown.

- Combines isolating and venting in a single valve, eliminating the need for tubing and fittings
- Block valve isolates the downstream process fluids and the bleed valve exhausts upstream fluids enabling static pressure transmitters, switches or gauges to be removed without disturbing the permanent piping installation
- Block valve is located on the left side and the bleed valve is located on top in a 90º orientation, venting is to the right
- 100% helium leak tested to 1 x 10^{-4} ml/s for guaranteed performance and reliability
- 2000 Series hard seat valves have 10,000 psi pressure rating @ 200ºF
- 2100 Series soft seat valves have 6,000 psi pressure rating @ 200ºF
- 2100 Series valve also features a replaceable Delrin® seat, and straight through porting for bidirectional, high capacity flow and easy roddable cleaning
- Blow-out proof stem provides a secondary stem seal in the full open position
- FKM o-ring seal and PTFE back-up ring below the stem threads to protect from corrosion and galling; PTFE or Grafoil® packing optional
- All stems are 316 stainless steel
- Stem and bonnet threads are rolled for strength and ease of operation
- One-piece bonnet with a metal-to-metal seal to the valve body below the bonnet threads
- Slotted spring pin to prevent accidental loosening
- Vinyl dust caps for bonnets and stems (non-packing)
- Zinc-nickel plated high tensile strength 4140 steel mounting bolts included for flanged connections

Flow Schematic

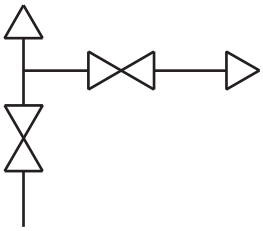

SPECIFICATIONS	
Materials	Zinc-nickel plated steel, electropolished 316 stainless steel
Connection	1/2" NPT, 1/4" NPT, NPT-flange, Flange-flange, NPT-NPT configurations available
Pressure ratings	Hard seat: 10,000 psi @ 200° F Soft seat: 6,000 psi @ 200° F
Orifice size	0.187"
Flow coefficient	Hard seat: C_V 0.44 Soft seat: C_V 0.76
Stem seal & type	All 316 stainless steel stems with FKM o-ring and PTFE back-up ring below the threads, PTFE or Grafoil® packing optional
Options	Panel mountings, o-ring materials, handles, packings, regulating stem and stem tips

NOTE: All NOSHOK valve products conform to the MSS SP-99 instrument valves standards, and valves supplied with packing also conform to MSS SP-132 compression packing systems for instrument valves standard.

ORDERING INFORMATION						
SERIES	**2**	2-valve				
SEAT	**0**	Hard seat	**1**	Soft seat		
PROCESS TYPE	**0**	Static pressure				
CONNECTION	**0**	1/2" NPT standard or flange	**2**	1/4" NPT		
VALVE TYPE	**MFC**	Flange-Female, Steel	**MFS**	Flange-Female,Stainless Steel	**MMC**	Flange-Flange, Steel
	FFC	Female-Female, Steel	**FFS**	Female-Female, Stainless Steel	**MMS**	Flange-Flange, Stainless Steel

Please consult your local NOSHOK Distributor or NOSHOK, Inc. for availability and delivery information.

EXAMPLE **2 1 0 0 – MFC**

Series..... 2-valve
Seat.....Soft seat
Process type ..... Static pressure
Connection..... 1/2" NPT standard or flange
Valve type ..... Flange-female, steel

To meet all of your specific application requirements, the following additional options are available for these manifold valves. To order all or any of these options, simply add them to the part number as shown in the diagram below.

NOTE 1: The example shown includes ALL possible additional options. Please include ONLY the options required for your application when building your part number. (EXAMPLE: 2100-MFC-P1)

NOTE 2: When a packing option is selected, an o-ring option is NOT available.

NOTE 3: T1 Hard non-rotating (316 SS standard) stem tip is the only option available on the 2100 Series soft seat version.

ORDERING INFORMATION - Additional Options						
SOFT SEATS	**PK1**	PEEK	**KF1**	PCTFE		
PACKINGS	**P1**	PTFE	**P2**	Grafoil®**		
STEM TIPS	**T1**	Non-rotating (316 stainless)	**T6**	Ball (carbide)**	**T8**	Ball (Monel)**
	T5	Ball (440C stainless)**	**T7**	Ball (ceramic)**	**T9**	Regulating hard**
O-RINGS*	**EM1**	EPDM	**KZ1**	FFKM (Kalrez® 3018 or equivalent)	**NB1**	NBR
HANDLES	**HL1**	1-13/16" Mini "T"	**HL4**	1-3/8" Phenolic		
	HL3	1" Round knurled	**HL5**	1-3/4" Phenolic		

Please consult your local NOSHOK Distributor or NOSHOK, Inc. for availability and delivery information.

* Other o-ring materials available on request.
** For 2000 Series only.

Please note that the standard o-ring in all the NOSHOK valves is FKM and the standard handles are "T" handles (HL2).

The handle material will always match the material of the valve, unless otherwise specified. For example, the "T" handle (HL2) on the 2100-MFC will be steel. When only the standard configuration is needed, no additional designations are necessary. Please consult the factory for special application requests.

EXAMPLE with Additional Options **2 1 0 0 – MFC – PK1 – P1**

Series..... 2-valve
Seat..... Soft seat
Process type .....Static pressure
Connection.....1/2" NPT standard or flange
Valve type .....Flange-female, steel
Soft seat .....PEEK
Packing..... PTFE

Dimensions

Flange-Flange

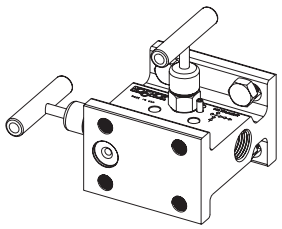

Top View

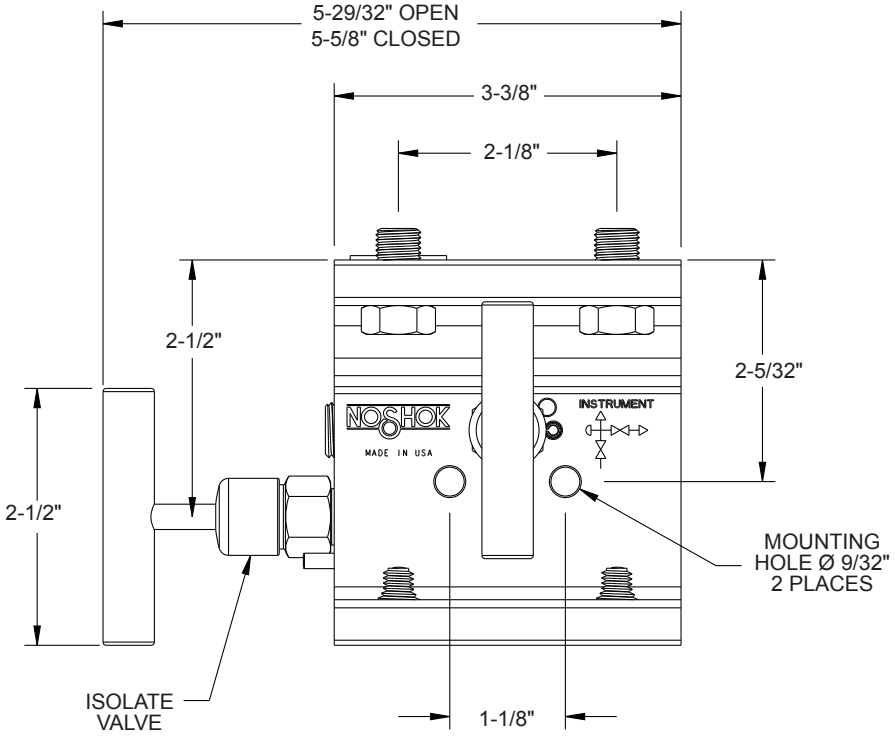

Side View

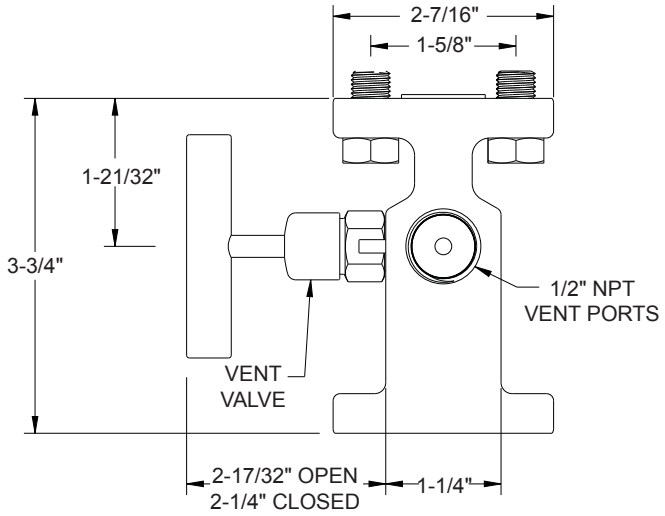

Flange-Female

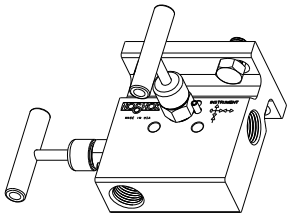

Top View

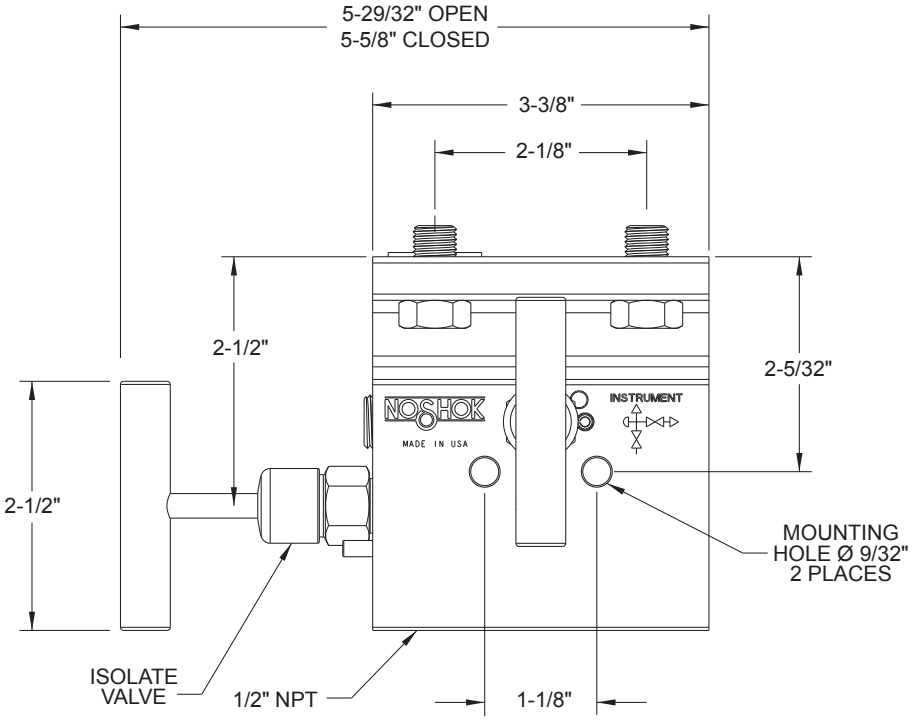

Side View

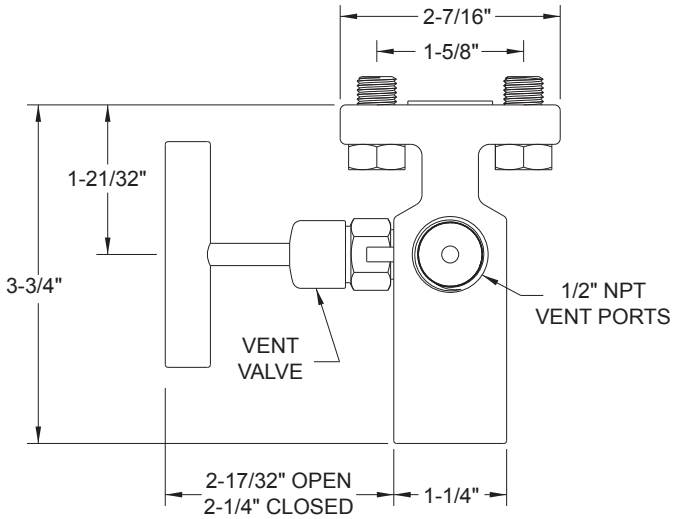

Dimensions

Female-Female

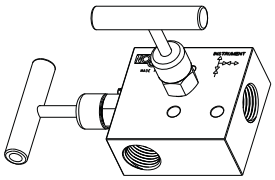

Top View

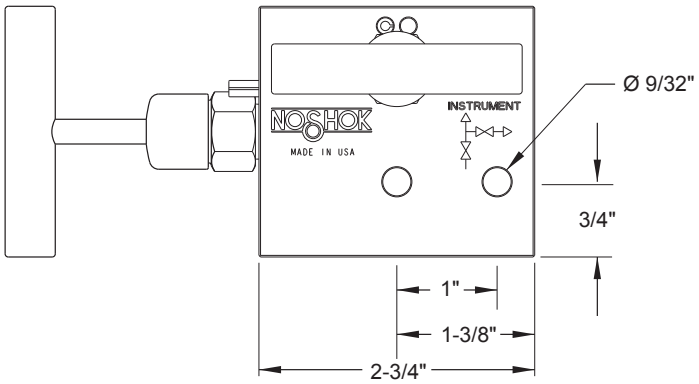

Front View

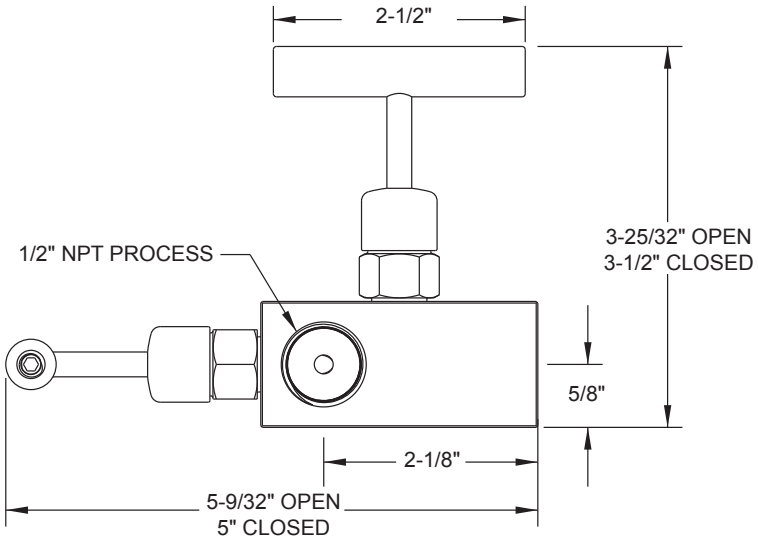

Side View

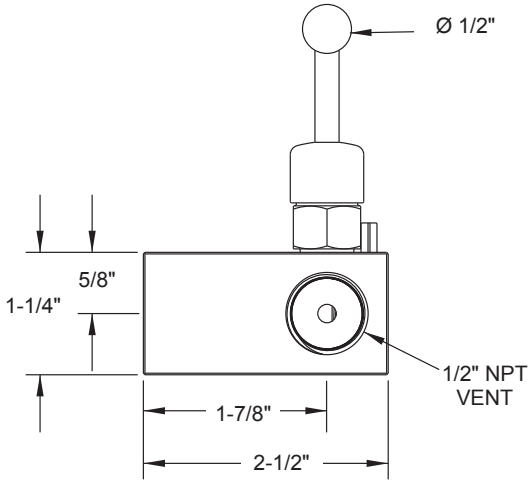

For panel mount and packing dimensions, see pgs. 64-65.

Hard Seat

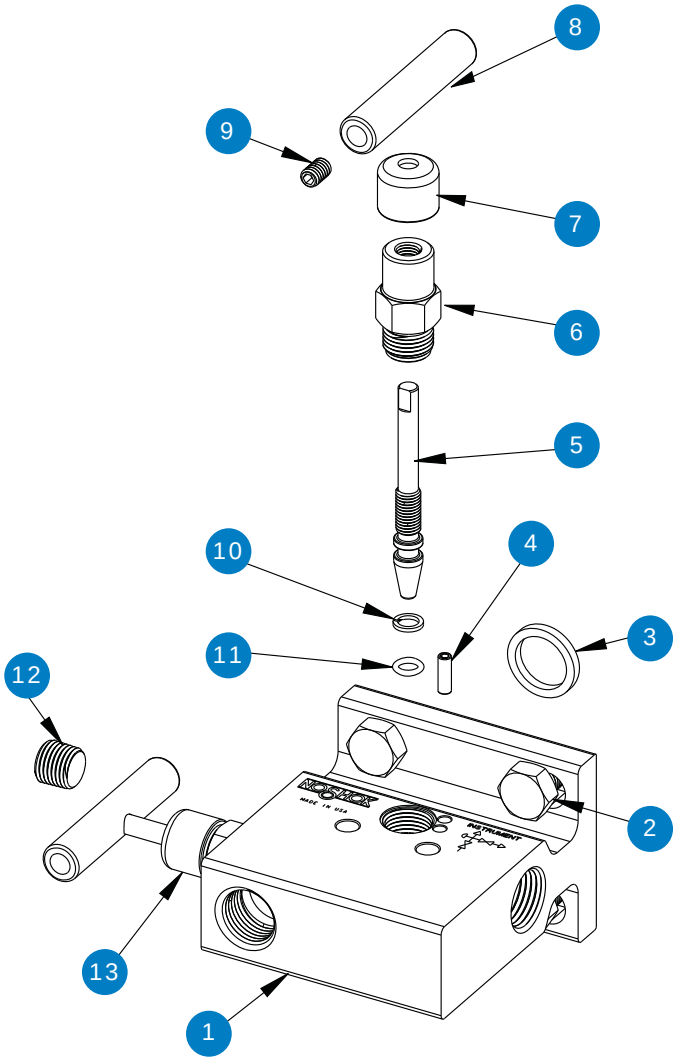

1 Valve body
2 Head bolt
3 Gasket ring
4 Slotted spring pin
5 Valve stem
6 Valve bonnet
7 Red dust cap
8 Valve “T” handle
9 Set screw
10 PTFE back-up ring
11 FKM o-ring
12 Plug
13 Blue dust cap

Soft Seat

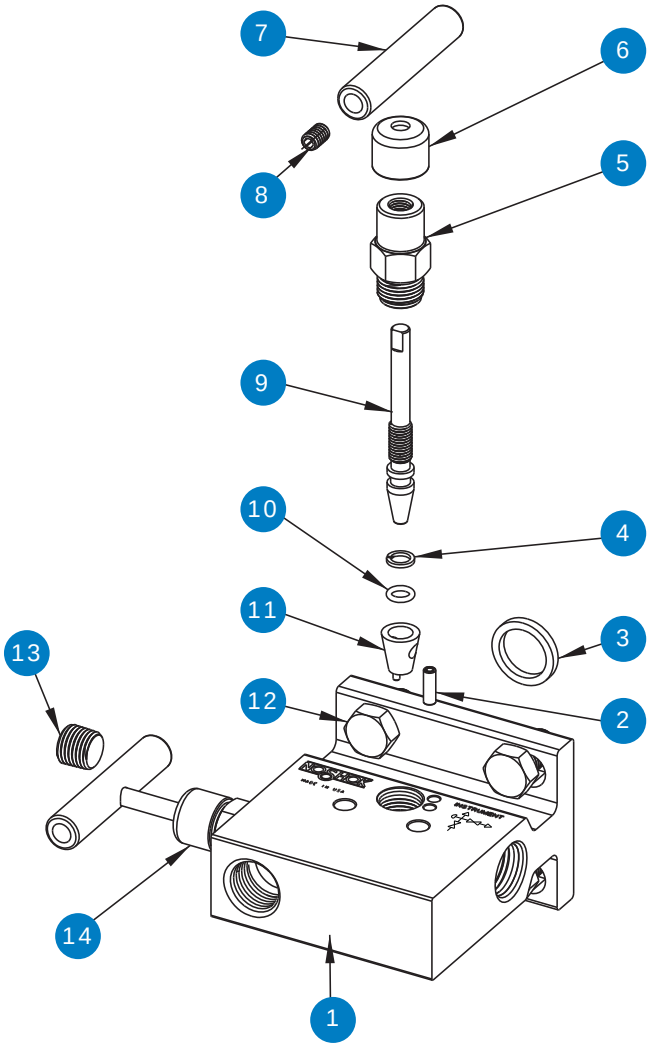

1 Valve body
2 Slotted spring pin
3 Gasket ring
4 PTFE back-up ring
5 Valve bonnet
6 Red dust cap
7 Valve“T” handle
8 Set screw
9 Valve stem
10 FKM o-ring
11 Delrin® seat
12 Head bolt
13 Plug
14 Blue dust cap

Hard & Soft Seat

2020/2120 SERIES

- Designed for use with differential pressure transmitters in liquid level applications
- Available in either single flange or double flange connection for direct installation
- 100% helium leak tested to 1 x 10^{-4} ml/s for guaranteed performance and reliability
- 2020 Series hard seat valves have 10,000 psi pressure rating @ 200°F
- 2120 Series soft seat valves have 6,000 psi pressure rating @ 200°F
- 2120 Series valves also feature a replaceable Delrin® seat, and straight through porting for bidirectional, high capacity flow and easy roddable cleaning
- Blow-out proof stem provides a secondary stem seal in the full open position
- FKM o-ring seal and PTFE back-up ring below the stem threads to protect from corrosion and galling; PTFE or Grafoil® packing optional
- All stems are 316 stainless steel
- All stem threads are rolled for strength and ease of operation
- One-piece bonnet with a metal-to-metal seal to the valve body below the bonnet threads
- Slotted spring pin to prevent accidental loosening
- Vinyl dust caps for bonnets and stems (non-packing)

Flow Schematic

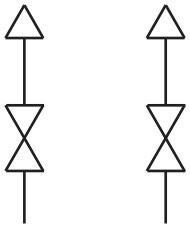

SPECIFICATIONS	
Materials	Zinc-nickel plated steel, electropolished 316 stainless steel
Connections	Flange-flange, 1/2" NPT-flange
Pressure ratings	Hard seat: 10,000 psi @ 200° F Soft seat: 6,000 psi @ 200° F
Orifice size	0.187"
Flow coefficient	Hard seat: C_V 0.44 Soft seat: C_V 0.76
Stem seal & type	All 316 stainless steel stems with FKM o-ring and PTFE back-up ring below the threads, PTFE or Grafoil® packing optional
Options	Panel mountings, o-ring materials, handles, packings, regulating stem and stem tips

NOTE: All NOSHOK valve products conform to the MSS SP-99 instrument valves standards, and valves supplied with packing also conform to MSS SP-132 compression packing systems for instrument valves standard.

ORDERING INFORMATION				
SERIES	**2** 2-valve			
SEAT	**0** Hard seat		**1** Soft seat	
PROCESS TYPE	**2** Liquid level			
CONNECTION	**0** 1/2" NPT standard or flange			
VALVE TYPE	**MFC** Flange-Female, Steel **MMC** Flange-Flange, Steel		**MFS** Flange-Female, Stainless Steel **MMS** Flange-Flange, Stainless Steel	

Please consult your local NOSHOK Distributor or NOSHOK, Inc. for availability and delivery information.

EXAMPLE **2 0 2 0 – MFC**

Series..... 2-valve
Seat..... Hard seat
Process type ..... Liquid level
Connection..... 1/2" NPT standard or flange
Valve type .....Flange-female, steel

To meet all of your specific application requirements, the following additional options are available for these manifold valves. To order all or any of these options, simply add them to the part number as shown in the diagram below.

NOTE 1: The example shown includes ALL possible additional options. Please include ONLY the options required for your application when building your part number. (EXAMPLE: 2020-MFC-P1)

NOTE 2: When a packing option is selected, an o-ring option is NOT available.

NOTE 3: The standard o-ring in all the NOSHOK manifold valves is FKM and T1 hard non-rotating (316SS) stem tip is the only option available on the 2120 Series soft seat version.

ORDERING INFORMATION - Additional Options						
SOFT SEATS	**PK1**	PEEK***	**KF1**	PCTFE***		
PACKINGS	**P1**	PTFE	**P2**	Grafoil®**		
STEM TIPS	**T1** **T5**	Non-rotating (316 stainless) Ball (440C stainless)**	**T6** **T7**	Ball (carbide)** Ball (ceramic)**	**T8** **T9**	Ball (Monel)** Regulating hard**
O-RINGS*	**EM1**	EPDM	**KZ1**	FFKM (Kalrez® 3018 or equivalent)	**NB1**	NBR
HANDLES	**HL1** **HL3**	1-13/16" Mini "T" 1" Round knurled	**HL4** **HL5**	1-3/8" Phenolic 1-3/4" Phenolic		

Please consult your local NOSHOK Distributor or NOSHOK, Inc. for availability and delivery information.

* Other o-ring materials available on request.
** For 2020 Series only.
*** For 2120 Series only.

Please note that the standard o-ring in all the NOSHOK valves is FKM and the standard handles are "T" handles (HL2).

The handle material will always match the material of the valve, unless otherwise specified. For example, the "T" handle (HL2) on the 2020-MFC will be steel. When only the standard configuration is needed, no additional designations are necessary. Please consult the factory for special application requests.

EXAMPLE with Additional Options **2 0 2 0 – MFC – P1 – T1**

Series..... 2-valve
Seat..... Hard seat
Process type ..... Liquid level
Connection..... 1/2" NPT standard or flange
Valve type .....Flange-female, steel
Packing..... PTFE
Stem tip ..... Non-rotating

Dimensions

Flange-Flange

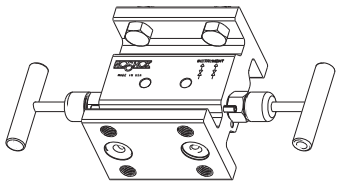

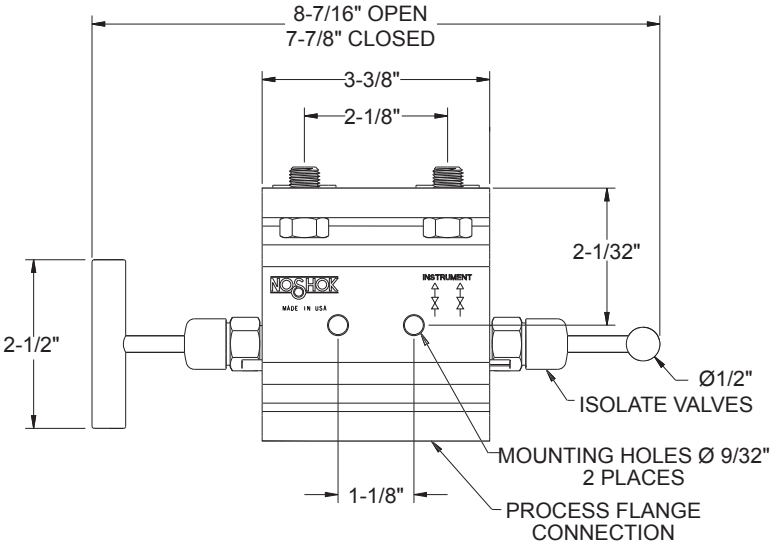

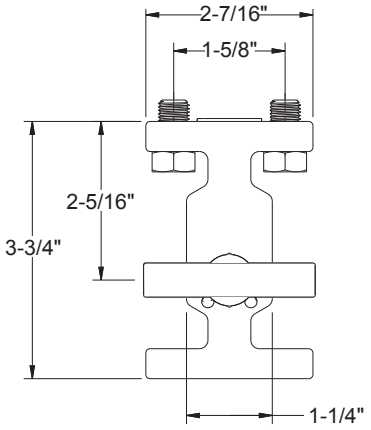

Flange-Female

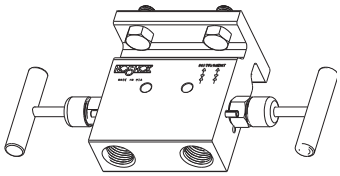

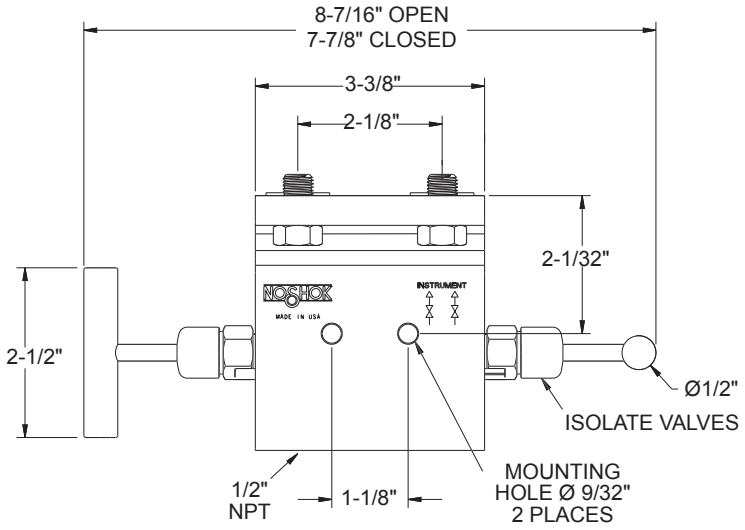

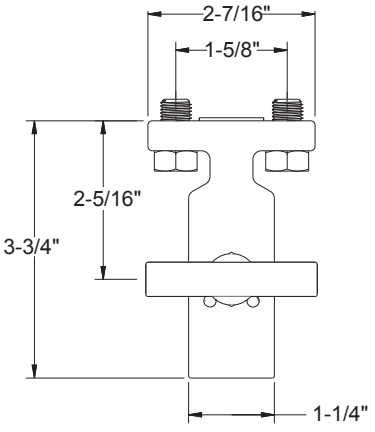

For panel mount and packing dimensions, see pgs. 64-65.

Hard Seat

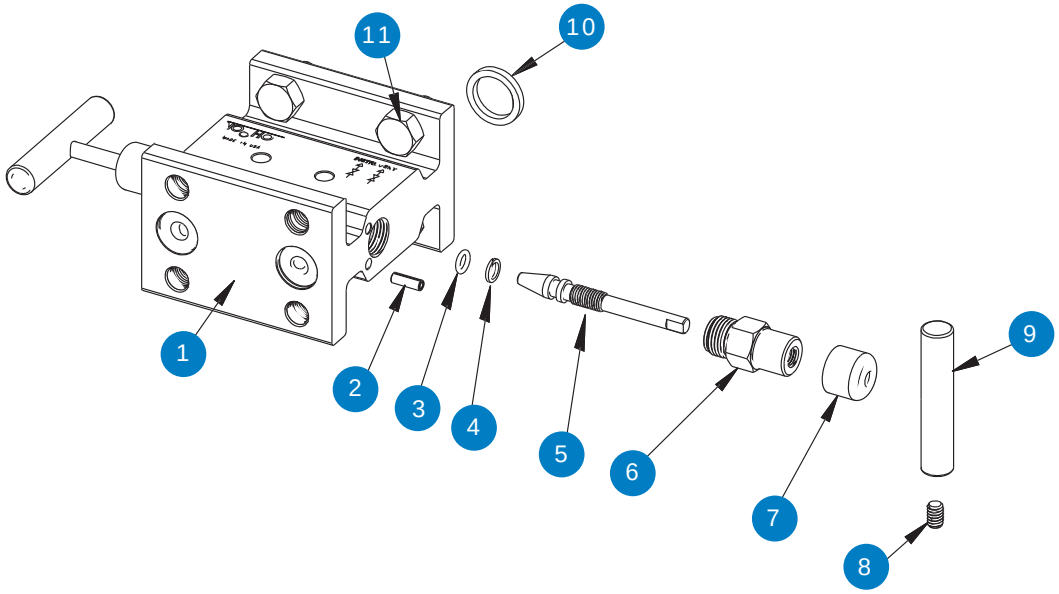

1 Valve body
2 Slotted spring pin
3 FKM o-ring
4 PTFE back-up ring
5 Valve stem
6 Valve bonnet
7 Blue dust cap
8 Set screw
9 Valve"T" handle
10 Gasket ring
11 Head bolt

Soft Seat

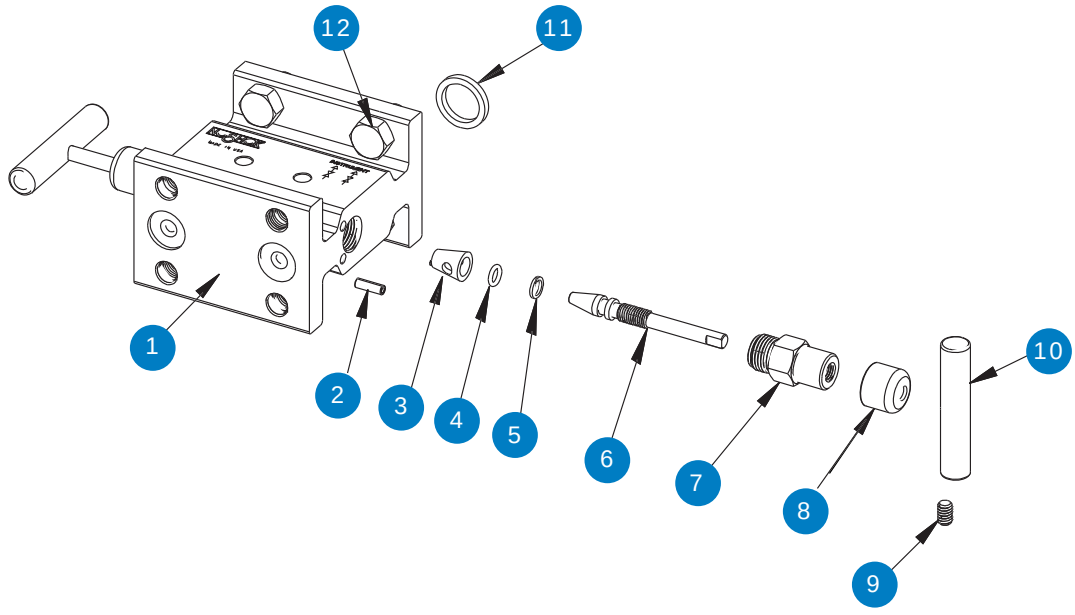

1 Valve body
2 Slotted spring pin
3 Delrin® seat
4 FKM o-ring
5 PTFE back-up ring
6 Valve stem
7 Valve bonnet
8 Blue dust cap
9 Set screw
10 Valve"T" handle
11 Gasket ring
12 Head bolt

Narrow Block & Bleed, Hard Seat & Soft Seat

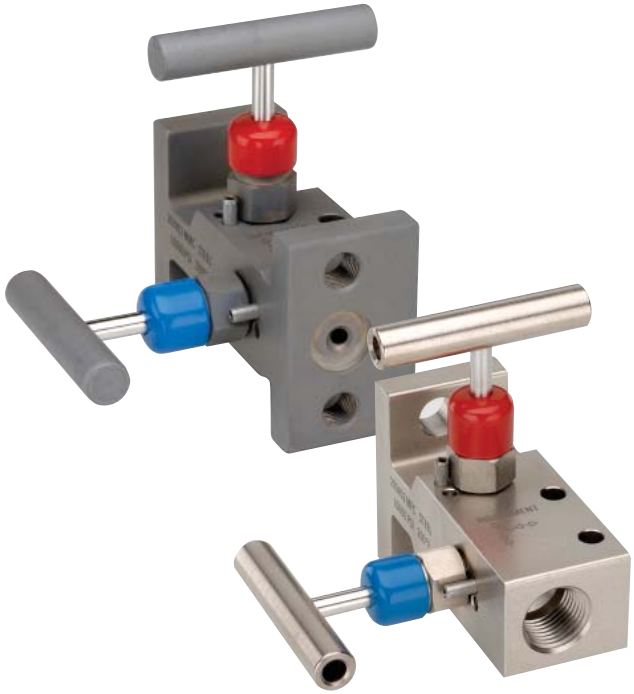

200002/210002 SERIES
200402/210402 SERIES

- Combines isolating and venting in a single valve, eliminating the need for tubing and fittings
- Block valve isolates the downstream process fluids and the bleed valve exhausts upstream fluids enabling static pressure transmitters, switches or gauges to be removed without disturbing the permanent piping installation
- Block valve is located on the left side and the bleed valve is located on top in a 90° orientation, venting is to the right
- 100% helium leak tested to 1 x 10^{-4} ml/s for guaranteed performance and reliability
- 200002/200402 Series hard seat valves have 10,000 psi pressure rating @200ºF
- 210002/210402 Series soft seat valves have 6,000 psi pressure rating @200ºF
- 210002/210402 Series valves also feature a replaceable Delrin® seat, and straight through porting for bidirectional, high capacity flow and easy roddable cleaning
- PTCFE or PEEK soft seat optional
- Blow-out proof stem provides a secondary stem seal in the full open position
- FKM o-ring seal and PTFE back-up ring below the stem threads to protect from corrosion and galling; PTFE or Grafoil® packing optional
- All stems are 316 stainless steel
- Stem and bonnet threads are rolled for strength and ease of operation
- One-piece bonnet with a metal-to-metal seal to the valve body below the bonnet threads
- Slotted spring pin to prevent accidental loosening
- Vinyl dust caps for bonnets and stems (non-packing)

Flow Schematic

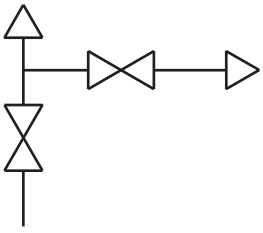

SPECIFICATIONS	
Materials	Zinc-nickel plated steel, electropolished 316 stainless steel
Connection	200002/210002 Series: Flange-flange, 1/4" NPT vent 200402/210402 Series: 1/2" NPT-flange, 1/4" NPT vent 200202/210202 Series: 1/4" NPT-flange, 1/4" NPT vent Left venting optional
Pressure ratings	Hard seat: 10,000 psi @ 200° F Soft seat: 6,000 psi @ 200° F
Orifice size	0.187"
Flow coefficient	Hard seat: C_V 0.44 Soft seat: C_V 0.76
Stem seal & type	All 316 stainless steel stems with FKM o-ring and PTFE back-up ring below the threads, PTFE or Grafoil® packing optional
Options	Panel mountings, o-ring materials, handles, packings, regulating stem and stem tips

NOTE: All NOSHOK valve products conform to the MSS SP-99 instrument valves standards, and valves supplied with packing also conform to MSS SP-132 compression packing systems for instrument valves standard.

ORDERING INFORMATION								
SERIES	**2**	2-valve						
SEAT	**0**	Hard seat	**1**	Soft seat				
PROCESS TYPE	**0**	Static pressure						
CONNECTION	**0**	Flange-flange	**2**	1/4" NPT-flange	**4**	1/2" NPT-flange (standard)		
VENT	**02**	1/4" NPT						
VALVE TYPE	**MFC**	Flange-Female, Steel	**MMS**	Flange-Flange, Stainless Steel	**MMCL**	Flange-Flange, Steel, Left Vent		
	MFS	Flange-Female, Stainless Steel	**MFCL**	Flange-Female, Steel, Left Vent	**MMSL**	Flange-Flange, Stainless Steel, Left Vent		
	MMC	Flange-Flange, Steel	**MFSL**	Flange - Female, Stainless Steel, Left Vent				

Please consult your local NOSHOK Distributor or NOSHOK, Inc. for availability and delivery information.

EXAMPLE **2 0 0 4 02 – MFC**

Series..... 2-valve
Seat..... Hard seat
Process type ..... Static pressure
Connection..... 1/2" NPT-Flange
Vent..... 1/4" NPT
Valve type ..... Flange-female, steel

To meet all of your specific application requirements, the following additional options are available for these manifold valves. To order all or any of these options, simply add them to the part number as shown in the diagram below.

NOTE 1: The example shown includes ALL possible additional options. Please include ONLY the options required for your application when building your part number. (EXAMPLE: 200402-MFC-P1)

NOTE 2: When a packing option is selected, an o-ring option is NOT available.

NOTE 3: T1 Hard non-rotating (316 stainless standard) stem tip is the only option available on the 210002/210402 Series soft seat version.

ORDERING INFORMATION - Additional Options						
PACKINGS	**P1**	PTFE	**P2**	Grafoil®**		
STEM TIPS	**T1**	Non-rotating (316 stainless)	**T6**	Ball (carbide)**	**T8**	Ball (Monel)**
	T5	Ball (440C stainless)**	**T7**	Ball (ceramic)**	**T9**	Regulating hard**
O-RINGS*	**EM1**	EPDM	**KZ1**	FFKM (Kalrez® 3018 or equivalent)	**NB1**	NBR
HANDLES	**HL1**	1-13/16" Mini "T"	**HL4**	1-3/8" Phenolic		
	HL3	1" Round knurled	**HL5**	1-3/4" Phenolic		

Please consult your local NOSHOK Distributor or NOSHOK, Inc. for availability and delivery information.

* Other o-ring materials available on request.
** For hard seat only.

Please note that the standard o-ring in all the NOSHOK valves is FKM and the standard handles are "T" handles (HL2).

The handle material will always match the material of the valve, unless otherwise specified. For example, the "T" handle (HL2) on the 200402-MFC will be steel. When only the standard configuration is needed, no additional designations are necessary. Please consult the factory for special application requests.

EXAMPLE with Additional Options **2 0 0 4 02 – MFC – P1 – T1**

Series..... 2-valve
Seat..... Hard seat
Process type ..... Static pressure
Connection..... 1/2" NPT-Flange
Vent..... 1/4" NPT
Valve type ..... Flange-female, steel
Packing.....PTFE
Stem tip ..... Non-rotating

Dimensions

Flange-Flange

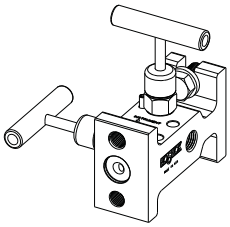

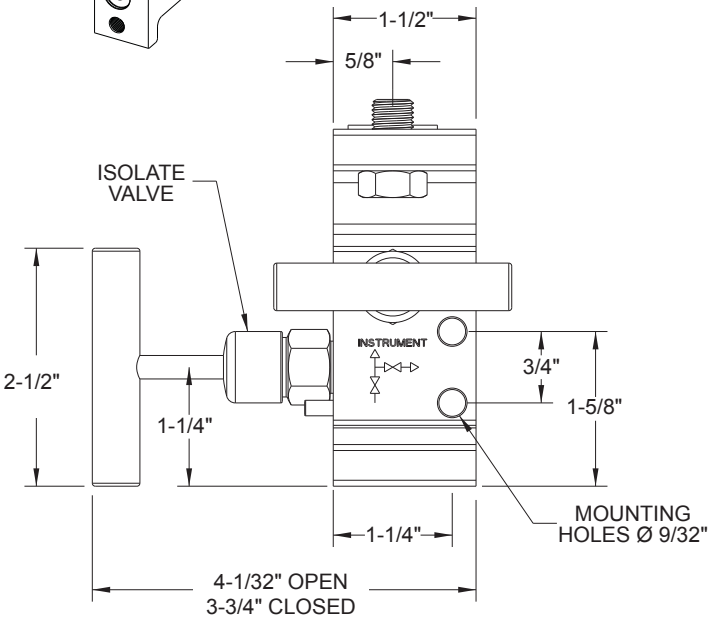

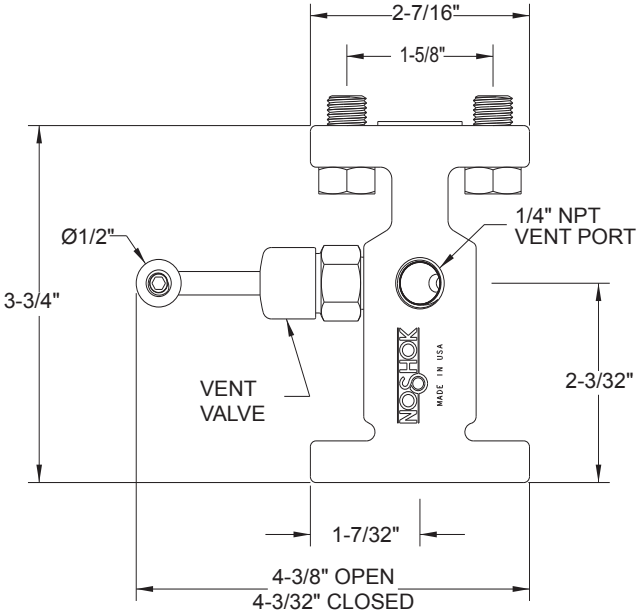

Flange-Female

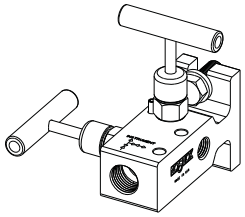

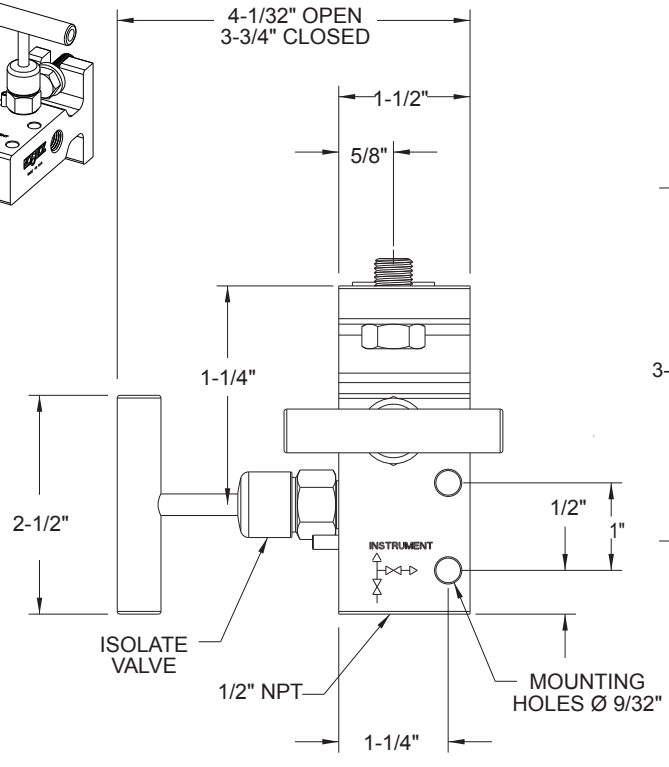

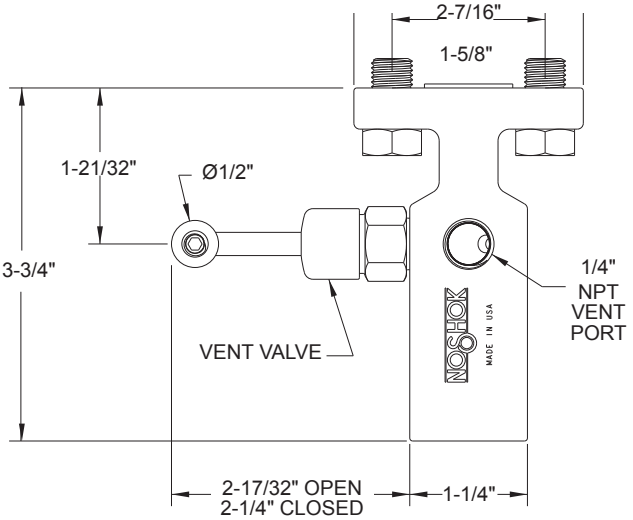

For panel mount and packing dimensions, see pgs. 64-65.

Hard Seat

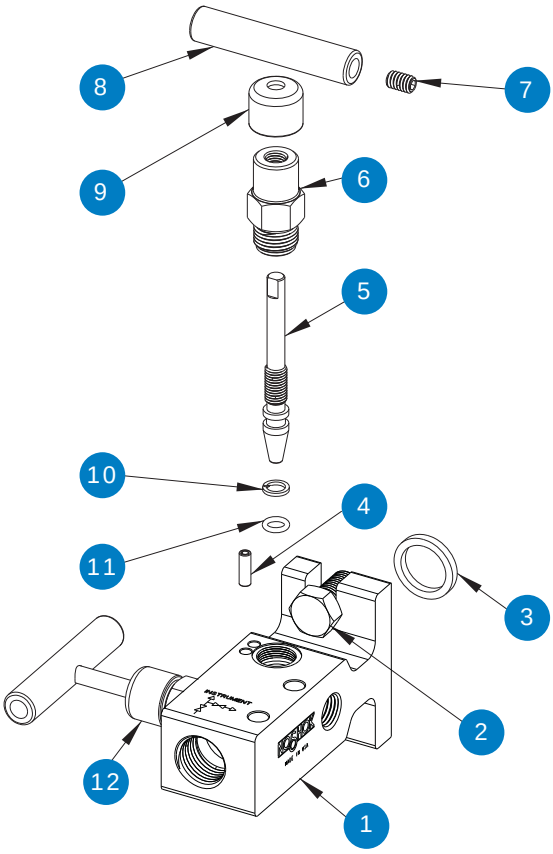

1 Valve body
2 Head bolt
3 Gasket ring
4 Slotted spring pin
5 Valve stem
6 Valve bonnet
7 Set screw
8 Valve “T” handle
9 Red dust cap
10 PTFE back-up ring
11 FKM o-ring
12 Blue dust cap

Soft Seat

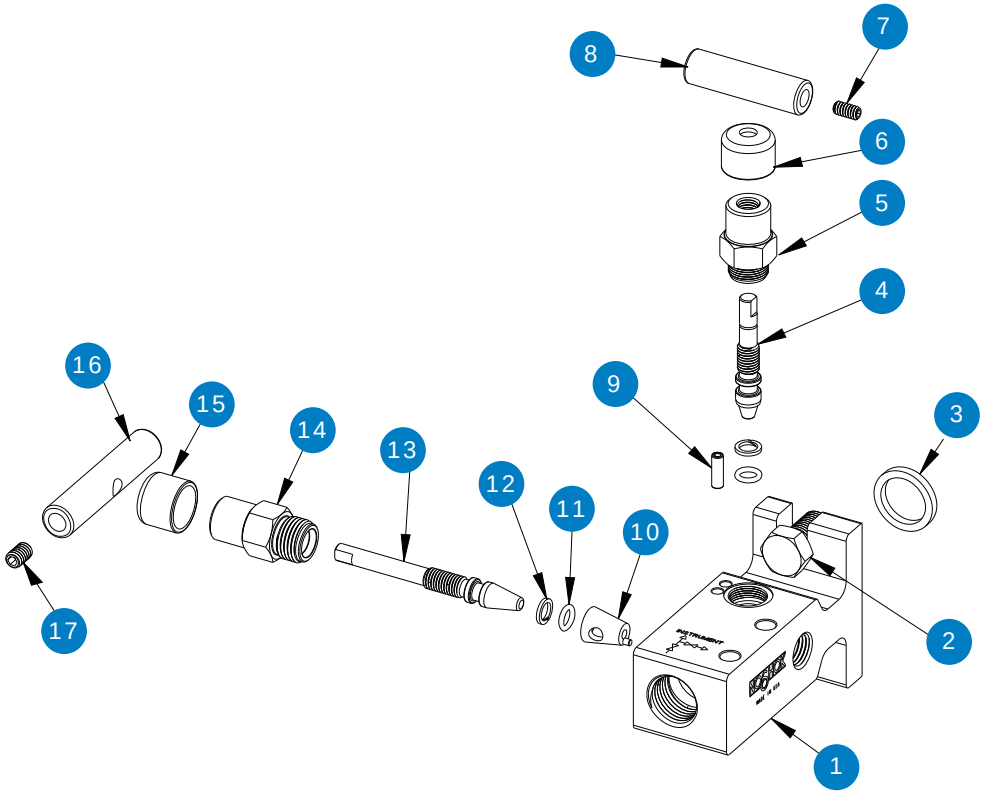

1 Valve body
2 Head bolt
3 Gasket ring
4 Soft tip valve stem
5 Valve bonnet
6 Red dust cap
7 Set screw
8 Valve “T” handle
9 Slotted spring pin
10 Delrin® seat
11 FKM o-ring
12 PTFE back-up ring
13 Valve stem
14 Valve bonnet
15 Blue dust cap
16 Valve “T” handle
17 Set screw

Mini Block & Bleed, Hard Seat & Soft Tip (0.141" Orifice)

2602/2702 SERIES

- Combines isolating and venting in a single valve, eliminating the need for tubing and fittings
- Block valve isolates the downstream process fluids and the bleed valve exhausts upstream fluids enabling static pressure transmitters, switches or gauges to be removed without disturbing the permanent piping installation
- Valves are located on the top to fit into compact spaces and two holes are provided for mounting, venting is to the left
- 100% helium leak tested to 1 x 10^{-4} ml/s for guaranteed performance and reliability
- Soft tip valves feature a patented Delrin® non-rotating soft tip stem, and a back-up metal-to-metal seal **(U.S. Patent 6,820,857)**
- 2602 Series hard seat valves have 10,000 psi pressure rating @ 200°F
- 2702 Series soft tip valves have 6,000 psi pressure rating @ 200°F
- Blow-out proof stem provides a secondary stem seal in the full open position
- FKM o-ring seal and PTFE back-up ring below the stem threads to protect from corrosion and galling; PTFE or Grafoil® packing optional
- All stems are 316 stainless steel
- Stem and bonnet threads are rolled for strength and ease of operation
- One-piece bonnet with a metal-to-metal seal to the valve body below the bonnet threads
- Slotted spring pin to prevent accidental loosening
- Vinyl dust caps for bonnets and stems (non-packing)
- Patented body-to-bonnet, metal-to-metal seal is designed to significantly increase the pressure range of the valve **(U.S. Patent 7,758,014)**

Flow Schematic

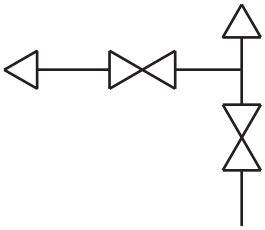

SPECIFICATIONS	
Materials	Zinc-nickel plated steel, electropolished 316 stainless steel
Connections	1/4" NPT, 1/8" NPT, right venting optional
Pressure ratings	Hard seat: 10,000 psi @ 200° F Soft tip: 6,000 psi @ 200° F
Orifice size	0.141"
Flow coefficient	Hard seat: C_V 0.38 Soft tip: C_V 0.38
Stem seal & type	All 316 stainless steel stems with FKM o-ring and PTFE back-up ring below the threads, PTFE or Grafoil® packing optional
Options	Panel mountings, o-ring materials, handles, packings, regulating stem and stem tips

NOTE: All NOSHOK valve products conform to the MSS SP-99 instrument valves standards, and valves supplied with packing also conform to MSS SP-132 compression packing systems for instrument valves standard.

ORDERING INFORMATION				
SERIES	**2** 2-valve			
SEAT	**6** Hard seat		**7** Soft tip	
PROCESS TYPE	**0** Static pressure			
CONNECTION	**1** 1/8" NPT		**2** 1/4" NPT	
VALVE TYPE	**FFC** Female-Female, Steel **FFS** Female-Female, Stainless Steel		**FFCR** Female-Female, Steel, Right Vent **FFSR** Female-Female, Stainless Steel, Right Vent	

Please consult your local NOSHOK Distributor or NOSHOK, Inc. for availability and delivery information.

EXAMPLE **2 6 0 2 – FFC**

Series.....2-valve
Seat.....Hard seat
Process type.....Static pressure
Connection.....1/4" NPT
Valve type.....Female-female, steel

To meet all of your specific application requirements, the following additional options are available for these manifold valves. To order all or any of these options, simply add them to the part number as shown in the diagram below.

NOTE 1: The example shown includes ALL possible additional options. Please include ONLY the options required for your application when building your part number. (EXAMPLE: 2602-FFC-P1)

NOTE 2: When a packing option is selected, an o-ring option is NOT available.

ORDERING INFORMATION - Additional Options								
PACKINGS	**P1** PTFE		**P2** Grafoil®**					
STEM TIPS	**T1** Non-rotating (316 stainless) **T2** Delrin® (Acetal)*** **T3** PTCFE***		**T4** PEEK*** **T5** Ball (440C stainless)** **T6** Ball (carbide)**		**T7** Ball (ceramic)** **T8** Ball (Monel)** **T9** Regulating hard**		**T10** Regulating Delrin®*** **T11** Regulating PTCFE*** **T12** Regulating PEEK***	
O-RINGS*	**EM1** EPDM		**KZ1** FFKM (Kalrez® 3018 or equivalent)				**NB1** NBR	
HANDLES	**HL3** 1" Round knurled							

Please consult your local NOSHOK Distributor or NOSHOK, Inc. for availability and delivery information.

* Other o-ring materials available on request.
** For 2602 only.
*** For 2702 only.

Please note that the standard o-ring in all the NOSHOK valves is FKM and the standard handles are isolation mini "T" handles (HL7) and equalizing (HL7) mini "T" handles.

The handle material will always match the material of the valve, unless otherwise specified. For example, the mini "T" handle (HL7) on the 2602-FFC will be steel. When only the standard configuration is needed, no additional designations are necessary. Please consult the factory for special application requests.

EXAMPLE with Additional Options **2 6 0 2 – FFC – P1**

Series.....2-valve
Seat.....Hard seat
Process type.....Static pressure
Connection.....1/4" NPT
Valve type.....Female-female, steel
Packing.....PTFE

Dimensions

Female-Female

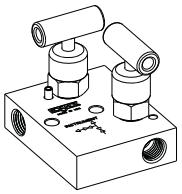

Top View

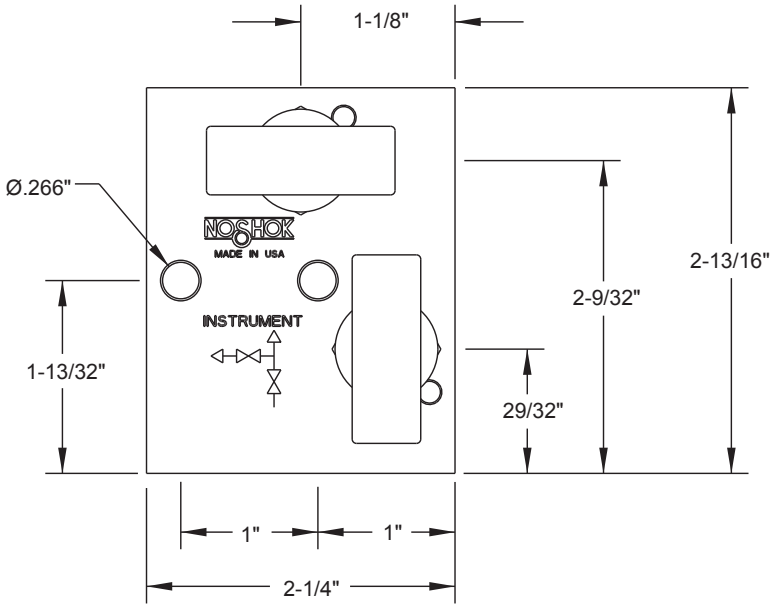

Front View

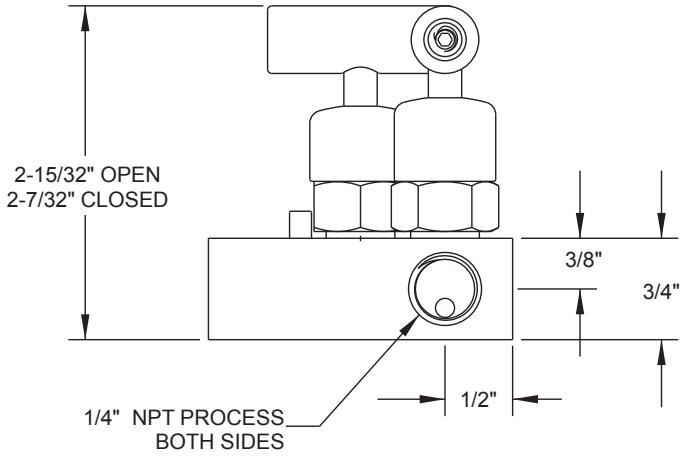

Side View

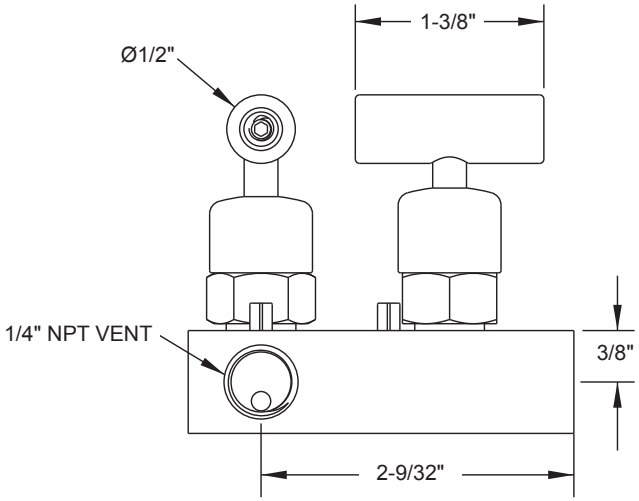

For panel mount and packing dimensions, see pgs. 64-65.

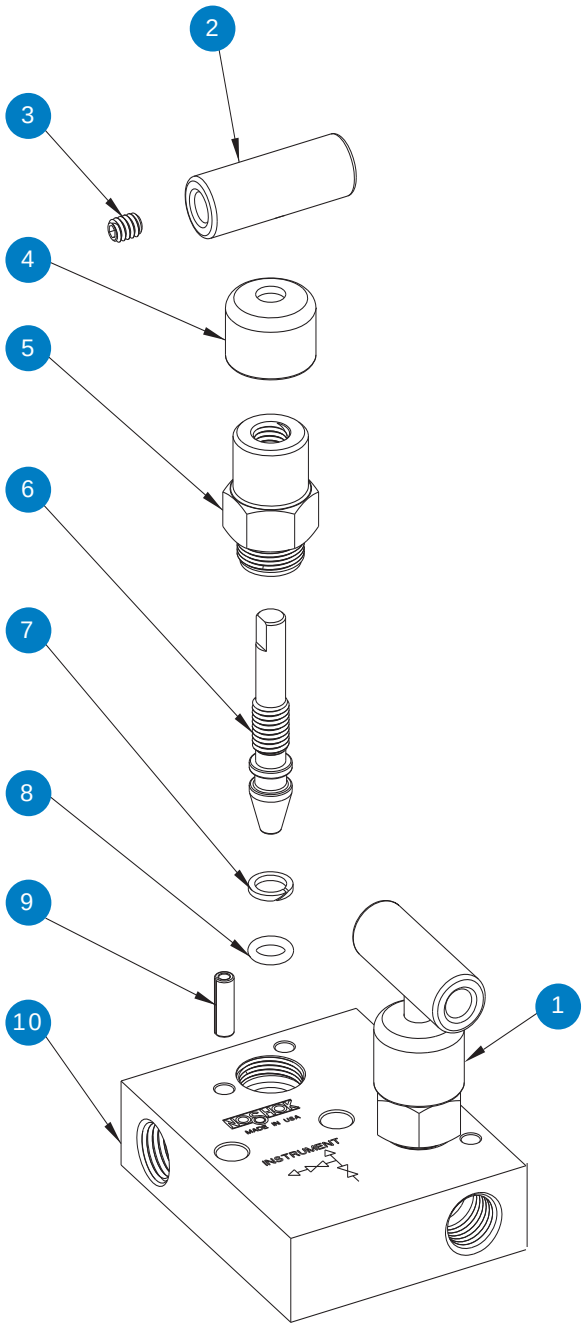

1 Blue dust cap
2 Mini valve “T” handle
3 Set screw
4 Red dust cap
5 Mini valve bonnet
6 Soft tip stem or mini valve stem
7 PTFE back-up ring
8 FKM o-ring
9 Slotted spring pin
10 Valve body

Block & Bleed, Hard & Soft Tip (0.156" Orifice)

Note: Packing option shown.
HL2 handles shown,
HL1 is standard.

2603/2703 SERIES
2604/2704 SERIES

- Combines isolating and venting in a single valve, eliminating the need for tubing and fittings
- Block valve isolates the downstream process fluids and the bleed valve exhausts upstream fluids enabling static pressure transmitters, switches or gauges to be removed without disturbing the permanent piping installation
- Block valve is located on the right and the bleed valve is located on top in a 90° orientation, venting is to the left
- 100% helium leak tested to 1 x 10^{-4} ml/s for guaranteed performance and reliability
- Soft tip valves feature a patented Delrin® non-rotating soft tip stem, and a back-up metal-to-metal seal **(U.S. Patent 6,820,857)**
- 2603/2604 Series hard seat valves have 10,000 psi pressure rating @ 200°F
- 2703/2704 Series soft tip valves have 6,000 psi pressure rating @ 200°F
- Blow-out proof stem provides a secondary stem seal in the full open position
- FKM o-ring seal and PTFE back-up ring below the stem threads to protect from corrosion and galling; PTFE or Grafoil® packing optional
- All stems are 316 stainless steel
- All stem threads are rolled for strength and ease of operation
- One-piece bonnet with a metal-to-metal seal to the valve body below the bonnet threads
- Slotted spring pin to prevent accidental loosening
- Vinyl dust caps for bonnets and stems (non-packing)
- Patented body-to-bonnet, metal-to-metal seal is designed to significantly increase the pressure range of the valve **(U.S. Patent 7,758,014)**

Flow Schematic

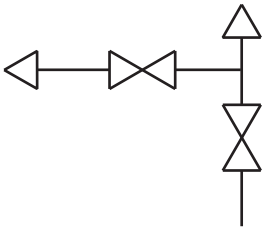

SPECIFICATIONS	
Materials	Zinc-nickel plated steel, electropolished 316 stainless steel
Connections	2603/2703 Series: 3/8" NPT 2604/2704 Series: 1/2" NPT, right venting optional
Pressure ratings	Hard seat: 10,000 psi @ 200° F Soft tip: 6,000 psi @ 200° F
Orifice size	0.156"
Flow coefficient	C_V 0.44
Stem seal & type	All 316 stainless steel stems with FKM o-ring and PTFE back-up ring below the threads, PTFE or Grafoil® packing optional
Options	Panel mountings, o-ring materials, handles, packings, regulating stem and stem tips

NOTE: All NOSHOK valve products conform to the MSS SP-99 instrument valves standards, and valves supplied with packing also conform to MSS SP-132 compression packing systems for instrument valves standard.

ORDERING INFORMATION				
SERIES	**2** 2-valve			
SEAT	**6** Hard seat		**7** Soft tip	
PROCESS TYPE	**0** Static pressure			
CONNECTION	**3** 3/8" NPT		**4** 1/2" NPT	
VALVE TYPE	**FFC** Female-Female, Steel **FFS** Female-Female, Stainless Steel		**FFCR** Female-Female, Steel, Right Vent **FFSR** Female-Female, Stainless Steel, Right Vent	

Please consult your local NOSHOK Distributor or NOSHOK, Inc. for availability and delivery information.

EXAMPLE **2 7 0 4 – FFC**

Series..... 2-valve
Seat..... Soft tip
Process type .....Static pressure
Connection..... 1/2" NPT
Valve type.....Female-female, steel

To meet all of your specific application requirements, the following additional options are available for these manifold valves. To order all or any of these options, simply add them to the part number as shown in the diagram below.

NOTE 1: The example shown includes ALL possible additional options. Please include ONLY the options required for your application when building your part number. (EXAMPLE: 2704-MFC-P1)

NOTE 2: When a packing option is selected, an o-ring option is NOT available.

NOTE 3: The standard o-ring in all the NOSHOK manifold valves is FKM.

ORDERING INFORMATION - Additional Options								
PACKINGS	**P1** PTFE		**P2** Grafoil®**					
STEM TIPS	**T1** Non-rotating (316 stainless)** **T2** Delrin® (Acetal)*** **T3** PTCFE***		**T4** PEEK*** **T5** Ball (440C stainless)** **T6** Ball (carbide)**		**T7** Ball (ceramic)** **T8** Ball (Monel)** **T9** Regulating hard**		**T10** Regulating Delrin®*** **T11** Regulating PTCFE*** **T12** Regulating PEEK***	
O-RINGS*	**EM1** EPDM		**KZ1** FFKM (Kalrez® 3018 or equivalent)				**NB1** NBR	
HANDLES	**HL2** 2-1/2" "T" **HL3** 1" Round knurled		**HL4** 1-3/8" Phenolic **HL5** 1-3/4" Phenolic					

Please consult your local NOSHOK Distributor or NOSHOK, Inc. for availability and delivery information.

* Other o-ring materials available on request.
** For 2603/2604 only.
*** For 2703/2704 only.

Please note that the standard o-ring in all the NOSHOK valves is FKM and the standard handles are mini "T" handles (HL1).

The handle material will always match the material of the valve, unless otherwise specified. For example, the mini "T" handle (HL1) on the 2704-FFC will be steel. When only the standard configuration is needed, no additional designations are necessary. Please consult the factory for special application requests.

EXAMPLE with Additional Options **2 7 0 4 – FFC – P1**

Series.....2-valve
Seat.....Soft tip
Process type ..... Static pressure
Connection.....1/2" NPT
Valve type ..... Female-female, steel
Packing.....PTFE

Dimensions

Female-Female

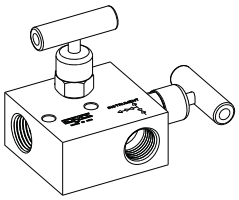

Top View

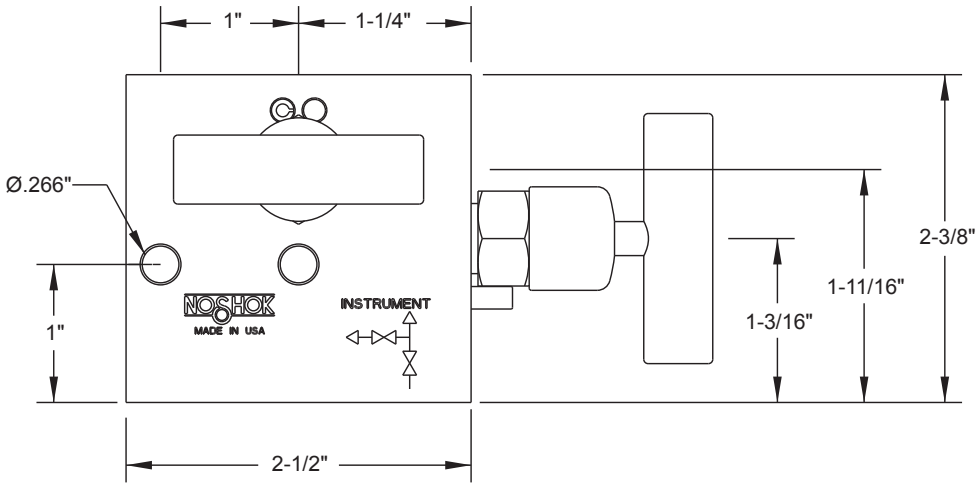

Front View

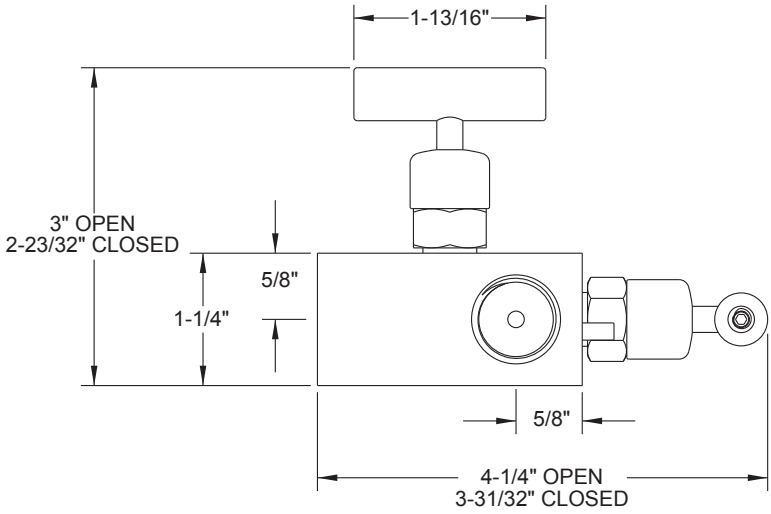

Side View

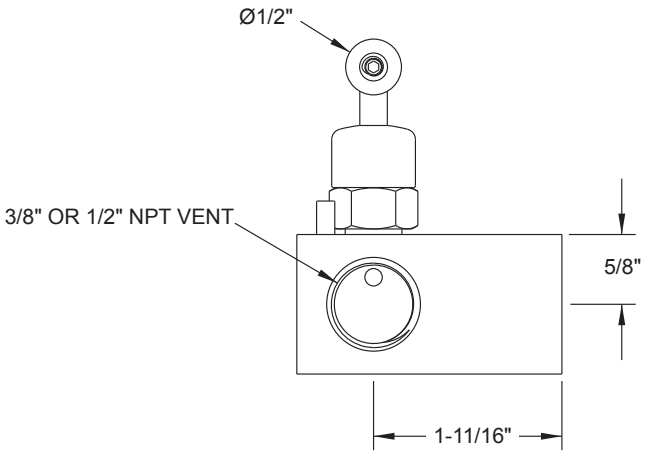

For panel mount and packing dimensions, see pgs. 64-65.

Hard Seat

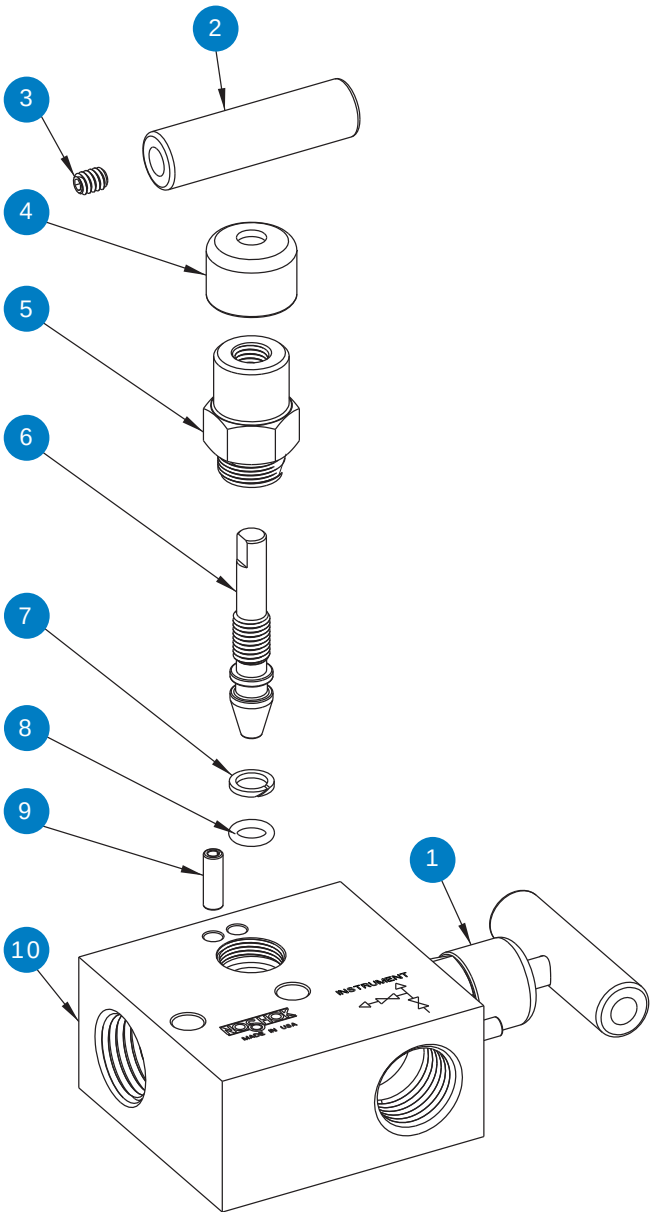

1 Blue dust cap
2 Mini valve “T” handle
3 Set screw
4 Red dust cap
5 Mini valve bonnet
6 Mini valve stem
7 PTFE back-up ring
8 FKM o-ring
9 Slotted spring pin
10 Valve body

Soft Tip

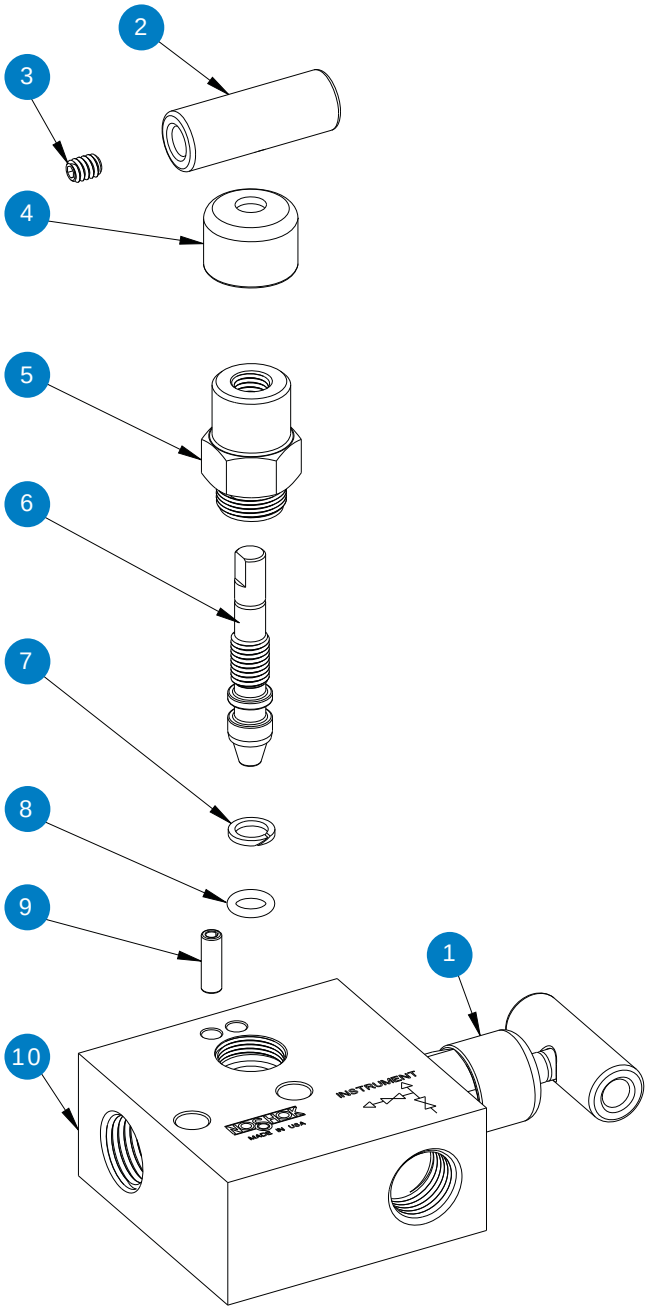

1 Blue dust cap
2 Mini valve “T” handle
3 Set screw
4 Red dust cap
5 Mini valve bonnet
6 Soft tip stem
7 PTFE back-up ring
8 FKM o-ring
9 Slotted spring pin
10 Valve body

Meter Manifold, Soft Seat

2180 SERIES

- Designed for use with orifice meters
- 100% helium leak tested to 1 x 10^{-4} ml/s for guaranteed performance and reliability
- 6,000 psi pressure rating @ 200°F
- Replaceable Delrin® seat and straight through porting for bidirectional, high capacity flow and easy roddable cleaning
- Blow-out proof stem provides a secondary stem seal in the full open position
- FKM o-ring seal and PTFE back-up ring below the stem threads to protect from corrosion and galling; PTFE or Grafoil® packing optional
- All stems are 316 stainless steel
- All stem threads are rolled for strength and ease of operation
- One-piece bonnet with a metal-to-metal seal to the valve body below the bonnet threads
- Slotted spring pin to prevent accidental loosening
- Vinyl dust caps for bonnets and stems (non-packing)

Optional 3 and 5 valve configurations also shown.
Additional needle valves sold separately.

Flow Schematics

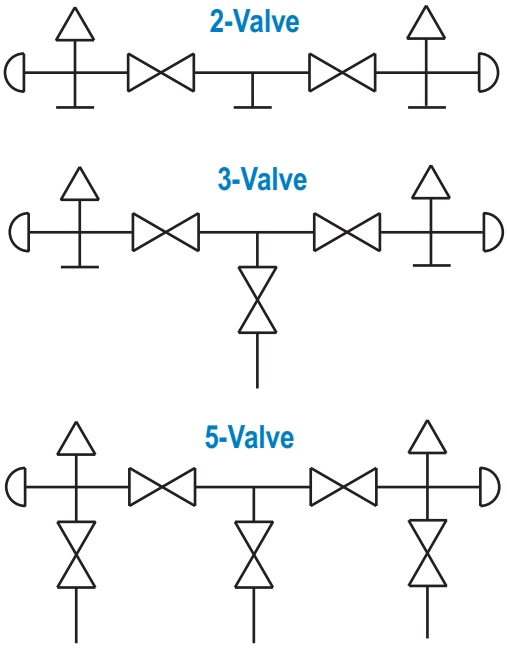

SPECIFICATIONS	
Materials	Zinc-nickel plated steel, electropolished 316 stainless steel
Connection	1/4" NPT
Pressure rating	6,000 psi @ 200° F
Orifice size	0.187"
Flow coefficient	C_V 0.76
Stem seal & type	All 316 stainless steel stems with FKM o-ring and PTFE back-up ring below the threads, PTFE packing optional
Options	Panel mountings, o-ring materials, handles, packings, regulating stem and stem tips

NOTE: All NOSHOK valve products conform to the MSS SP-99 instrument valves standards, and valves supplied with packing also conform to MSS SP-132 compression packing systems for instrument valves standard.

ORDERING INFORMATION					
SERIES	**2**	2-valve			
SEAT	**1**	Soft seat			
PROCESS TYPE	**8**	Meter manifold			
CONNECTION	**0**	1/4" NPT			
VALVE TYPE	**FFC**	Female-Female, Steel	**FFS**	Female-Female, Stainless Steel	

Please consult your local NOSHOK Distributor or NOSHOK, Inc. for availability and delivery information.

EXAMPLE **2 1 8 0 – FFC**

Series.....2-valve
Seat.....Soft seat
Process type.....Meter manifold
Connection.....1/4" NPT
Valve type.....Female-female, steel

To meet all of your specific application requirements, the following additional options are available for these manifold valves. To order all or any of these options, simply add them to the part number as shown in the diagram below.

NOTE 1: The example shown includes ALL possible additional options. Please include ONLY the options required for your application when building your part number. (EXAMPLE: 2180-FFC-P1)

NOTE 2: When a packing option is selected, an o-ring option is NOT available.

NOTE 3: The standard o-ring in all the NOSHOK manifold valves is FKM.

ORDERING INFORMATION - Additional Options						
PACKINGS	**P1**	PTFE				
STEM TIPS	**T1**	Non-rotating (316 stainless)				
O-RINGS*	**EM1**	EPDM	**KZ1**	FFKM (Kalrez® 3018 or equivalent)	**NB1**	NBR
HANDLES	**HL3**	1" Round knurled	**HL4**	1-3/8" Phenolic	**HL5**	1-3/4" Phenolic

Please consult your local NOSHOK Distributor or NOSHOK, Inc. for availability and delivery information.

* Other o-ring materials available on request.

Please note that the standard o-ring in all the NOSHOK valves is FKM and the standard handles are “T” handles (HL2).

The handle material will always match the material of the valve, unless otherwise specified. For example, the “T” handle (HL2) on the 2180-FFC will be steel. When only the standard configuration is needed, no additional designations are necessary. Please consult the factory for special application requests.

EXAMPLE with Additional Options **2 1 8 0 – FFC – P1**

Series.....2-valve
Seat.....Soft seat
Process type.....Meter manifold
Connection.....1/4" NPT
Valve type.....Female-female, steel
Packing.....PTFE

Dimensions

Female-Female

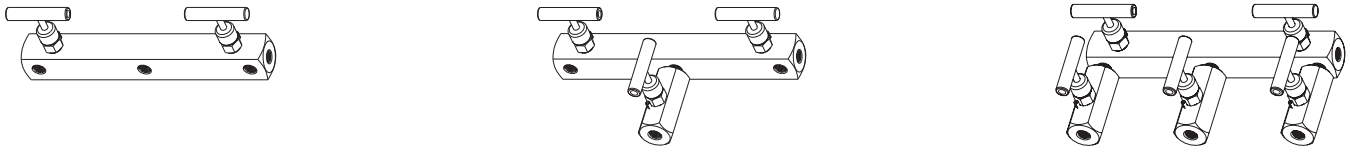

Optional 3 and 5 valve configurations also shown.
Additional needle valves sold separately.

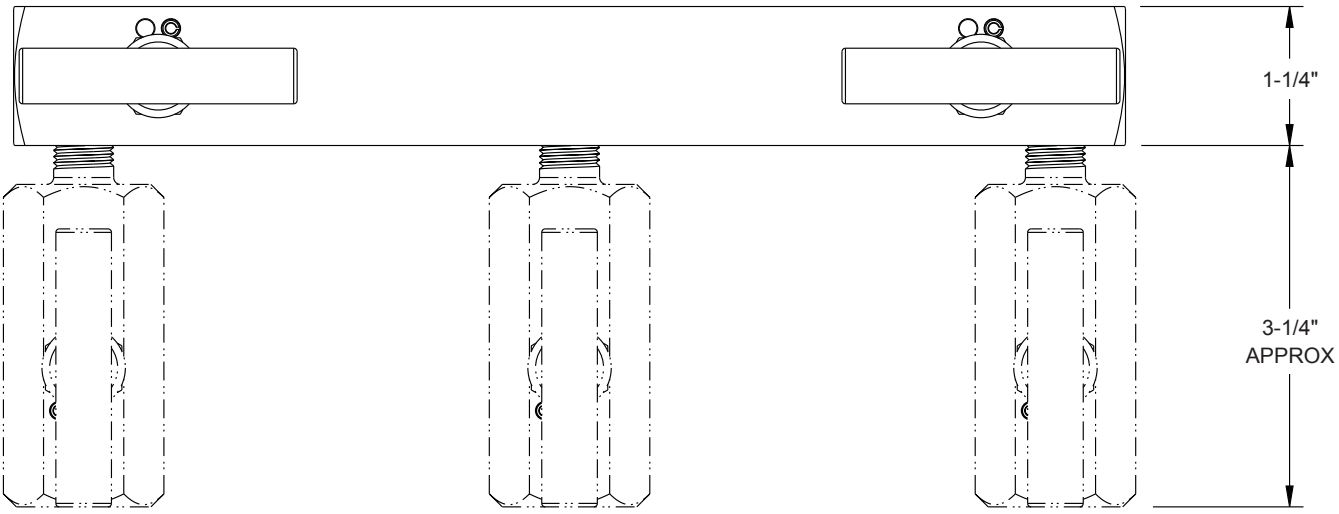

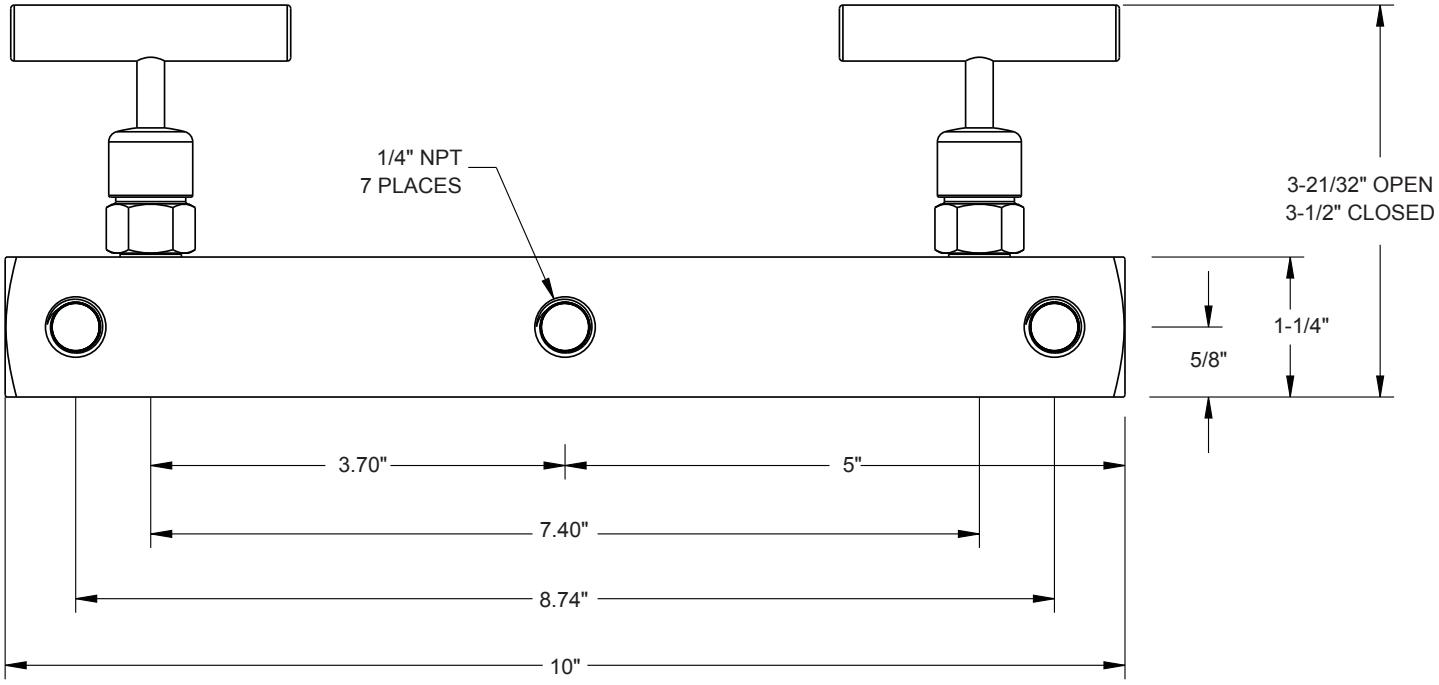

For panel mount and packing dimensions, see pgs. 64-65.

Hard Seat & Soft Seat

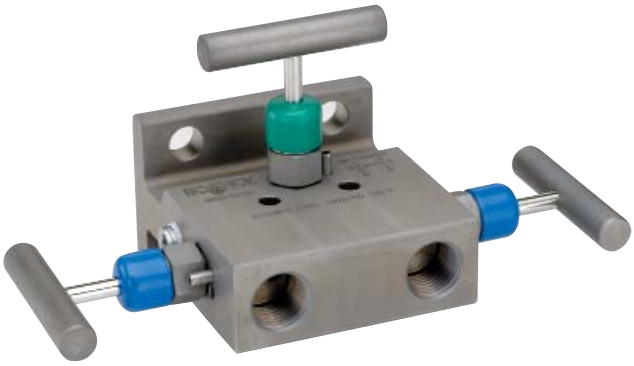

3010/3110 SERIES

- Available in block, single flange, or double flange connection for remote or direct installation
- Designed for use with differential pressure transmitters incorporating two isolation valves and an equalizing valve in differential pressure measurement
- 100% helium leak tested to 1 x 10^{-4} ml/s for guaranteed performance and reliability
- 3010 Series hard seat valves have 10,000 psi pressure rating @ 200°F
- 3110 Series soft seat valves have 6,000 psi pressure rating @ 200°F
- 3110 Series soft seat valves also feature a replaceable Delrin® seat, and straight through porting for bidirectional, high capacity flow and easy roddable cleaning
- Blow-out proof stem provides a secondary stem seal in the full open position
- FKM o-ring seal and PTFE back-up ring below the stem threads to protect from corrosion and galling; PTFE or Grafoil® packing optional
- All stems are 316 stainless steel
- All stem threads are rolled for strength and ease of operation
- One-piece bonnet with a metal-to-metal seal to the valve body below the bonnet threads
- Slotted spring pin to prevent accidental loosening
- Vinyl dust caps for bonnets and stems (non-packing)

Flow Schematic

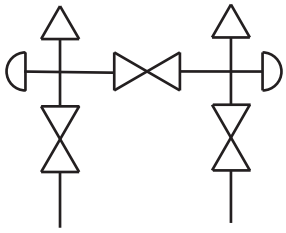

SPECIFICATIONS	
Materials	Zinc-nickel plated steel, electropolished 316 stainless steel
Connection	Flange-flange, 1/2" NPT-flange, 1/2" NPT-1/2" NPT
Pressure ratings	Hard seat: 10,000 psi @ 200° F Soft seat: 6,000 psi @ 200° F
Orifice size	0.187"
Flow coefficient	Hard seat: C_V 0.44 Soft seat: C_V 0.76
Stem seal & type	All 316 stainless steel stems with FKM o-ring and PTFE back-up ring below the threads, PTFE or Grafoil® packing optional
Options	Panel mountings, o-ring materials, handles, packings, regulating stem and stem tips

NOTE: All NOSHOK valve products conform to the MSS SP-99 instrument valves standards, and valves supplied with packing also conform to MSS SP-132 compression packing systems for instrument valves standard.

ORDERING INFORMATION						
SERIES	**3**	3-valve				
SEAT	**0**	Hard seat	**1**	Soft seat		
PROCESS TYPE	**1**	Differential pressure				
CONNECTION	**0**	1/2" NPT standard or flange				
VALVE TYPE	**MFC**	Flange-Female, Steel	**MFS**	Flange-Female, Stainless Steel	**MMC**	Flange-Flange, Steel
	FFC	Female-Female, Steel	**FFS**	Female-Female, Stainless Steel	**MMS**	Flange-Flange, Stainless Steel

Please consult your local NOSHOK Distributor or NOSHOK, Inc. for availability and delivery information.

EXAMPLE **3 1 1 0 – MFC**

Series..... 3-valve
Seat.....Soft seat
Process type .....Differential pressure
Connection..... 1/2" NPT standard or flange
Valve type.....Flange-female, steel

To meet all of your specific application requirements, the following additional options are available for these manifold valves. To order all or any of these options, simply add them to the part number as shown in the diagram below.

NOTE 1: The example shown includes ALL possible additional options. Please include ONLY the options required for your application when building your part number. (EXAMPLE: 3110-MFC-P1)

NOTE 2: When a packing option is selected, an o-ring option is NOT available.

NOTE 3: The standard o-ring in all the NOSHOK manifold valves is FKM and T1 hard non-rotating (316SS standard) stem tip is the only option available on the 3110 Series soft seat version.

ORDERING INFORMATION - Additional Options						
SOFT SEATS**	**PK1**	PEEK	**KF1**	PCTFE		
PACKINGS	**P1**	PTFE	**P2**	Grafoil®**		
STEM TIPS	**T1**	Non-rotating (316 stainless)	**T6**	Ball (carbide)**	**T8**	Ball (Monel)**
	T5	Ball (440C stainless)**	**T7**	Ball (ceramic)**	**T9**	Regulating hard**
O-RINGS*	**EM1**	EPDM	**KZ1**	FFKM (Kalrez® 3018 or equivalent)	**NB1**	NBR
HANDLES	**HL1**	1-13/16" Mini "T"	**HL4**	1-3/8" Phenolic		
	HL3	1" Round knurled	**HL5**	1-3/4" Phenolic		

Please consult your local NOSHOK Distributor or NOSHOK, Inc. for availability and delivery information.

* Other o-ring materials available on request.
** For 3010 only.

Please note that the standard o-ring in all the NOSHOK valves is FKM and the standard handles are "T" handles (HL2).

The handle material will always match the material of the valve, unless otherwise specified. For example, the "T" handle (HL2) on the 3110-MFC will be steel. When only the standard configuration is needed, no additional designations are necessary. Please consult the factory for special application requests.

EXAMPLE with Additional Options **3 1 1 0 – MFC – PK1 – P1 – T1**

Series..... 3-valve
Seat..... Soft seat
Process type .....Differential pressure
Connection.....1/2" NPT standard or flange
Valve type.....Flange-female, steel
Soft seat ..... PEEK
Packing..... PTFE
Stem tip .....Non-rotating

Dimensions

Flange-Flange

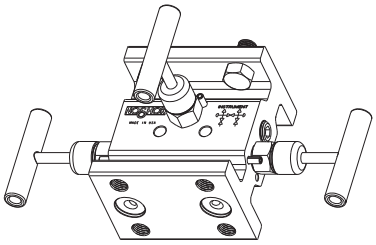

Top View

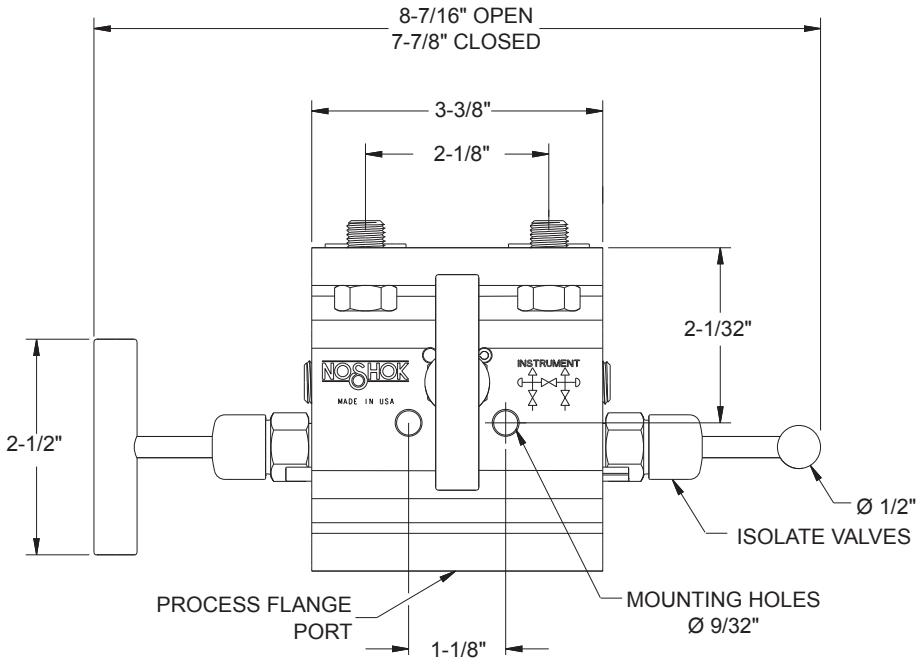

Side View

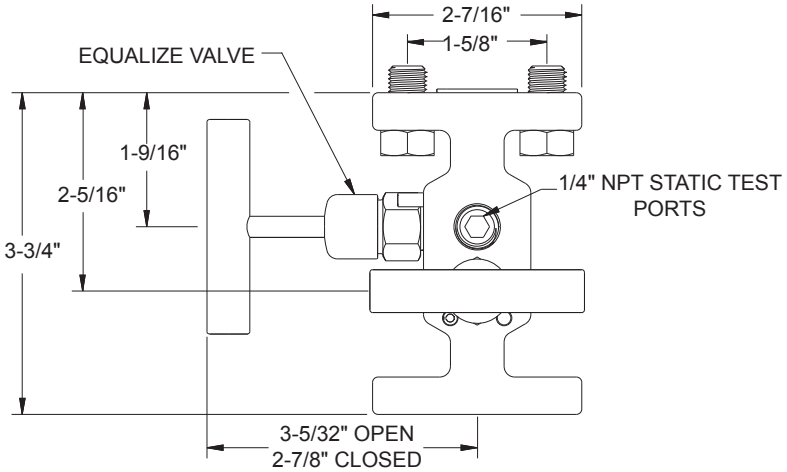

Flange-Female

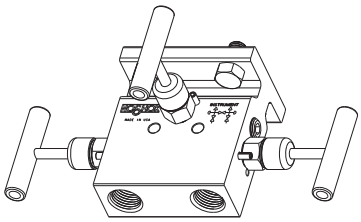

Top View

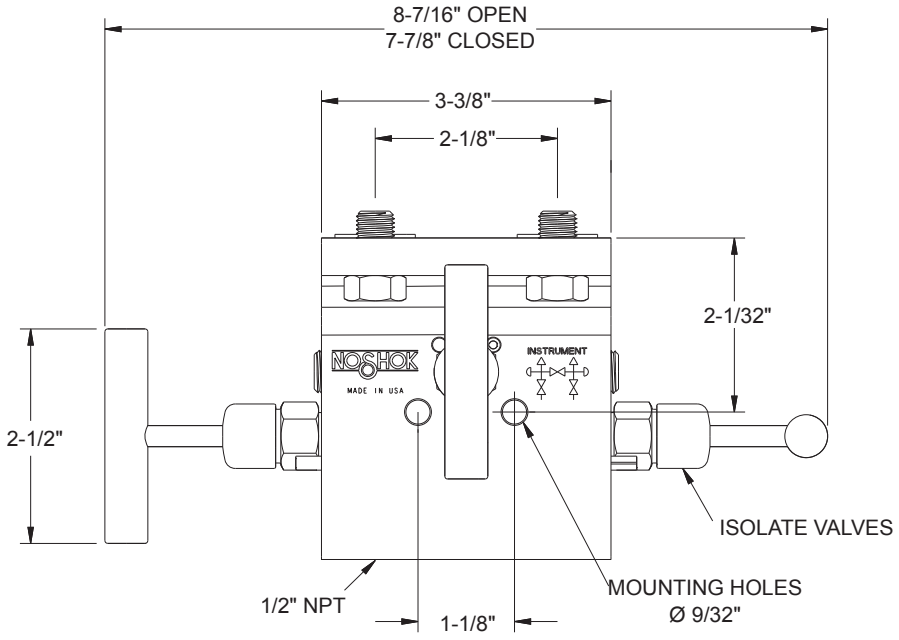

Side View

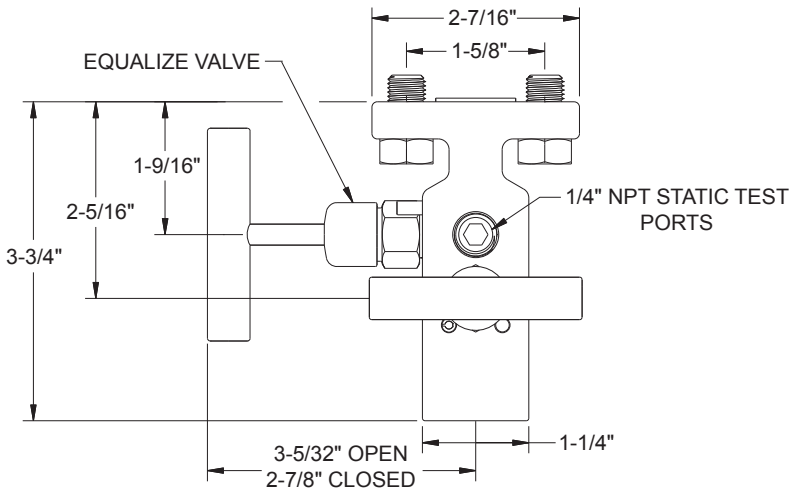

Dimensions

Female-Female

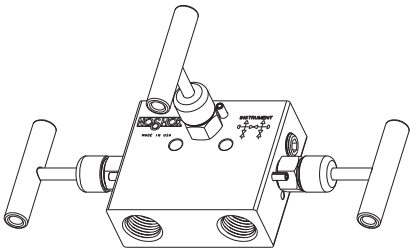

Top View

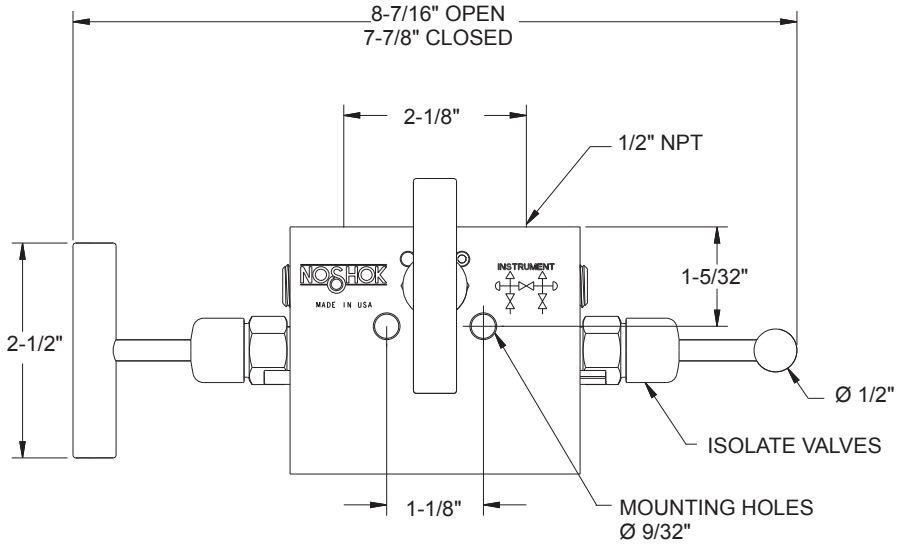

Side View

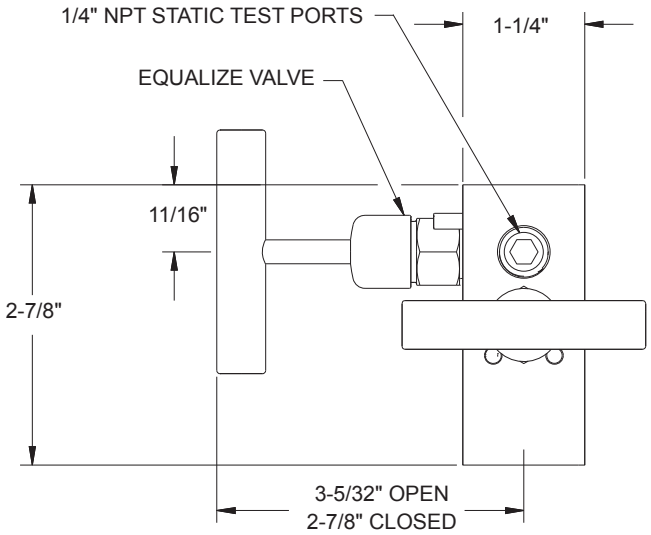

For panel mount and packing dimensions, see pgs. 64-65.

Hard Seat

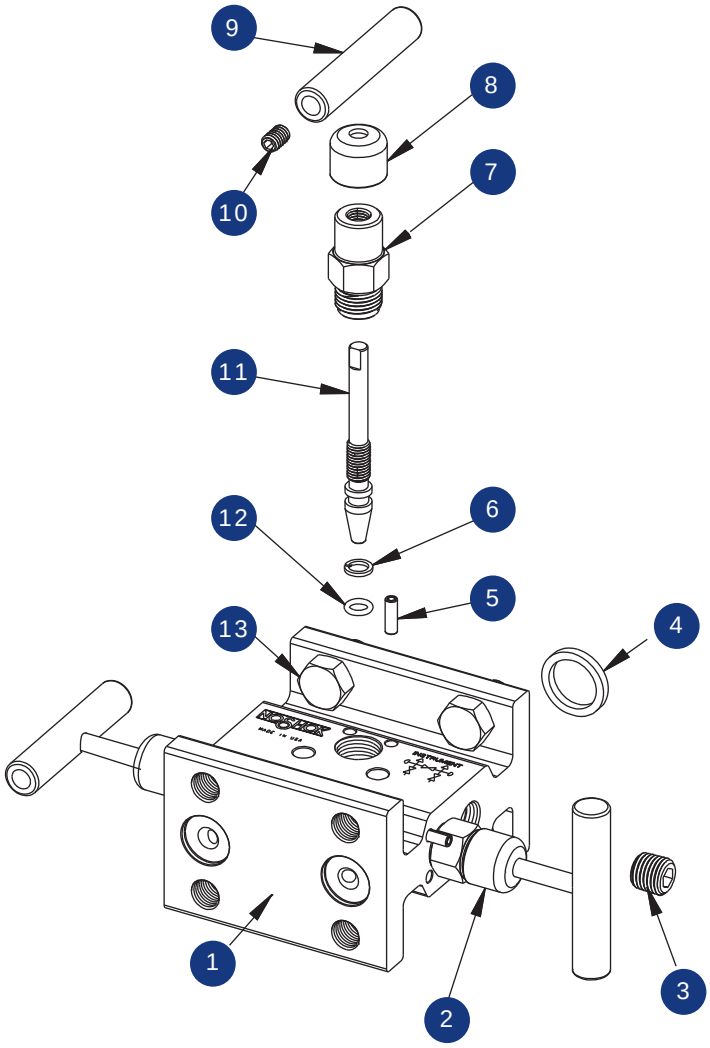

1 Valve body
2 Blue dust cap
3 Plug
4 Gasket ring
5 Slotted spring pin
6 PTFE back-up ring
7 Valve bonnet
8 Green dust cap
9 Valve "T" handle
10 Set screw
11 Valve stem
12 FKM o-ring
13 Head bolt

Soft Seat

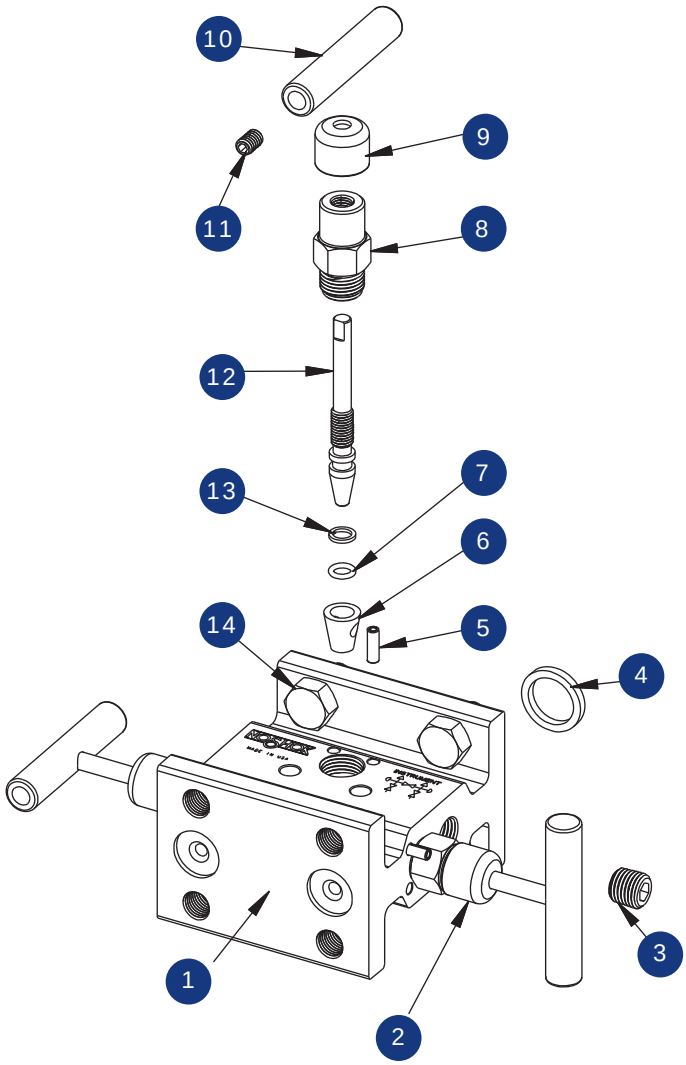

1 Valve body
2 Blue dust cap
3 Plug
4 Gasket ring
5 Slotted spring pin
6 Delrin® seat
7 FKM o-ring
8 Valve bonnet
9 Green dust cap
10 Valve "T" handle
11 Set screw
12 Valve stem
13 PTFE back-up ring
14 Head bolt

Soft Seat (0.375" Orifice)

3510 SERIES

- Designed for use with differential pressure transmitters incorporating two isolation valves and an equalizing valve in differential pressure measurement
- Available in block, single flange, or double flange connection for remote or direct installation
- 100% helium leak tested to 1 x 10^{-4} ml/s for guaranteed performance and reliability
- Soft seat design has 6,000 psi pressure rating @ 200°F
- Features a replaceable Delrin® seat, and straight through porting for bidirectional, high capacity flow and easy roddable cleaning
- Blow-out proof stem provides a secondary stem seal in the full open position
- FKM o-ring seal and PTFE back-up ring below the stem threads to protect from corrosion and galling
- All stems are 316 stainless steel
- All stem threads are rolled for strength and ease of operation
- One-piece bonnet with a metal-to-metal seal to the valve body below the bonnet threads
- Slotted spring pin to prevent accidental loosening
- Vinyl dust caps for bonnets and stems
- Non-rotating stem tip standard on isolation valves

Flow Schematic

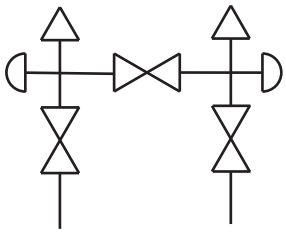

SPECIFICATIONS	
Materials	Zinc-nickel plated steel, electropolished 316 stainless steel
Connection	Flange-flange, 1/2" NPT-flange, 1/2" NPT-1/2" NPT
Pressure ratings	6,000 psi @ 200° F
Orifice size	0.375"
Flow coefficient	C_V 3.0
Stem seal & type	All 316 stainless steel stems with FKM o-ring and PTFE back-up ring below the threads
Options	Panel mountings, o-ring materials, handles, packings, regulating stem and stem tips

NOTE: All NOSHOK valve products conform to the MSS SP-99 instrument valves standards, and valves supplied with packing also conform to MSS SP-132 compression packing systems for instrument valves standard.

ORDERING INFORMATION						
SERIES	**3**	3-valve				
SEAT	**5**	Soft seat, 0.375" orifice				
PROCESS TYPE	**1**	Differential pressure				
CONNECTION	**0**	1/2" NPT standard or flange				
VALVE TYPE	**MFC**	Flange-Female, Steel	**MFS**	Flange-Female, Stainless Steel	**MMC**	Flange-Flange, Steel
	FFC	Female-Female, Steel	**FFS**	Female-Female, Stainless Steel	**MMS**	Flange-Flange, Stainless Steel

Please consult your local NOSHOK Distributor or NOSHOK, Inc. for availability and delivery information.

EXAMPLE **3 5 1 0 – MFC**

Series..... 3-valve
Seat..... Soft seat
Process type .....Differential pressure
Connection.....1/2" NPT standard or flange
Valve type.....Flange-female, steel

To meet all of your specific application requirements, the following additional options are available for these manifold valves. To order all or any of these options, simply add them to the part number as follows:

ORDERING INFORMATION - Additional Options						
SOFT SEATS	**PK1**	PEEK	**KF1**	PCTFE		
O-RINGS*	**EM1**	EPDM	**KZ1**	FFKM (Kalrez® 3018 or equivalent)	**NB1**	NBR
HANDLES	**HL3**	1" Round knurled	**HL4**	1-3/8" Phenolic	**HL5**	1-3/4" Phenolic

Please consult your local NOSHOK Distributor or NOSHOK, Inc. for availability and delivery information.

* Other o-ring materials available on request.

Please note that the standard o-ring in all the NOSHOK valves is FKM and the standard handles are isolation “T” handles (HL8) and equalizing “T” handles (HL2).

The handle material will always match the material of the valve, unless otherwise specified. For example, the “T” handle on the 3510-MFC will be steel. When only the standard configuration is needed, no additional designations are necessary. Please consult the factory for special application requests.

EXAMPLE with Additional Options **3 5 1 0 – MFC – PK1 – KZ1**

Series..... 3-valve
Seat..... Soft seat
Process type .....Differential pressure
Connection.....1/2" NPT standard or flange
Valve type.....Flange-female, steel
Soft seat .....PEEK
O-ring.....FFKM

Dimensions

Flange-Flange

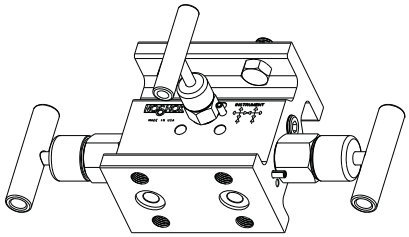

Top View

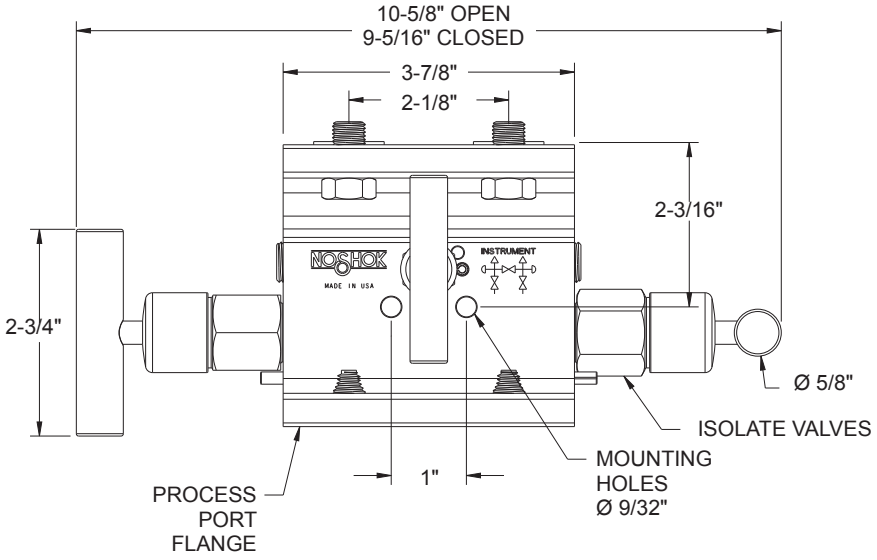

Side View

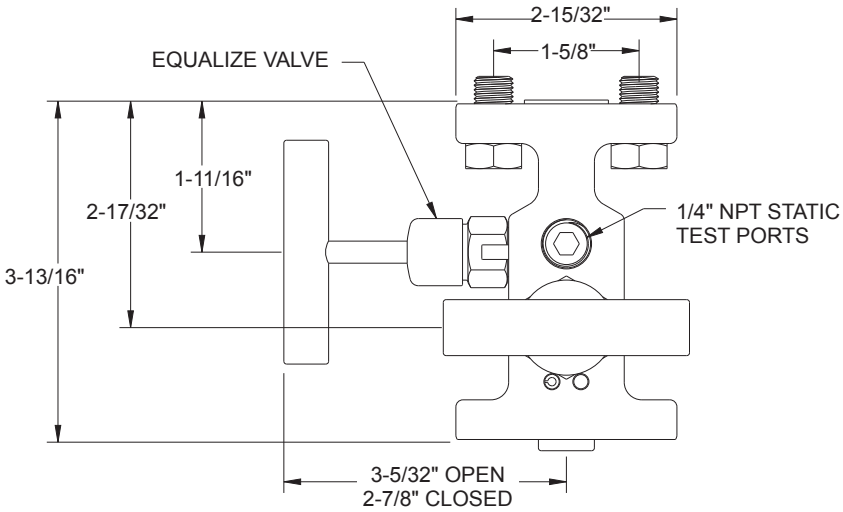

Flange-Female

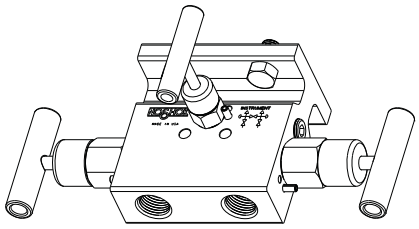

Top View

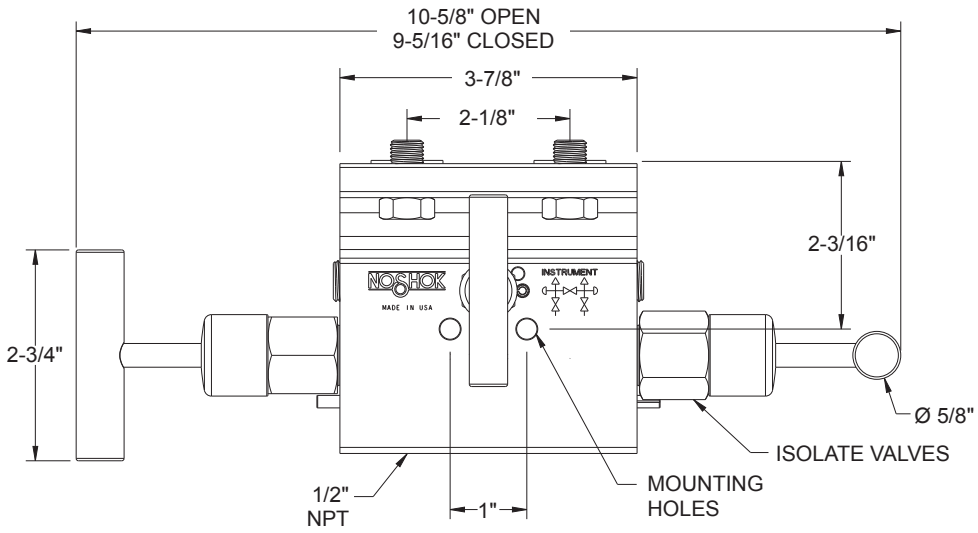

Side View

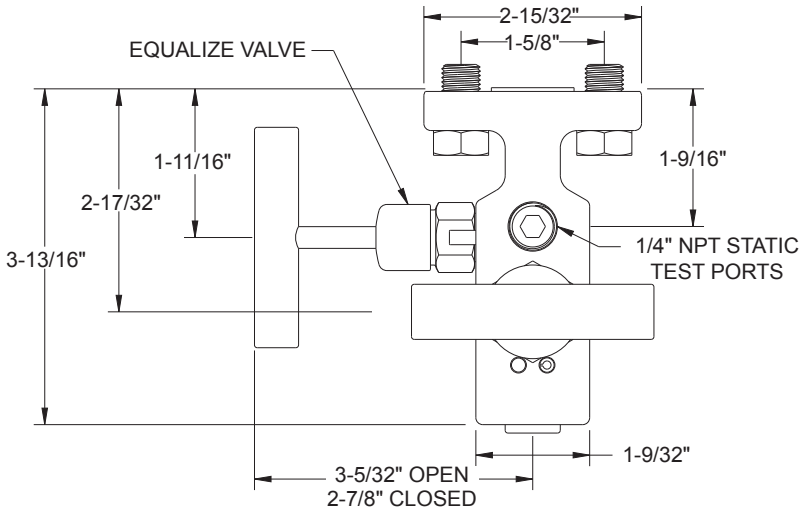

Dimensions

Female-Female

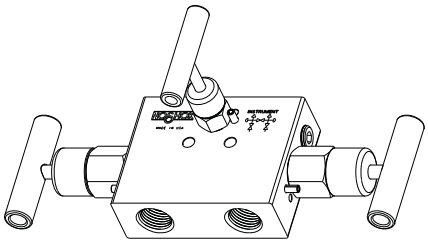

Top View

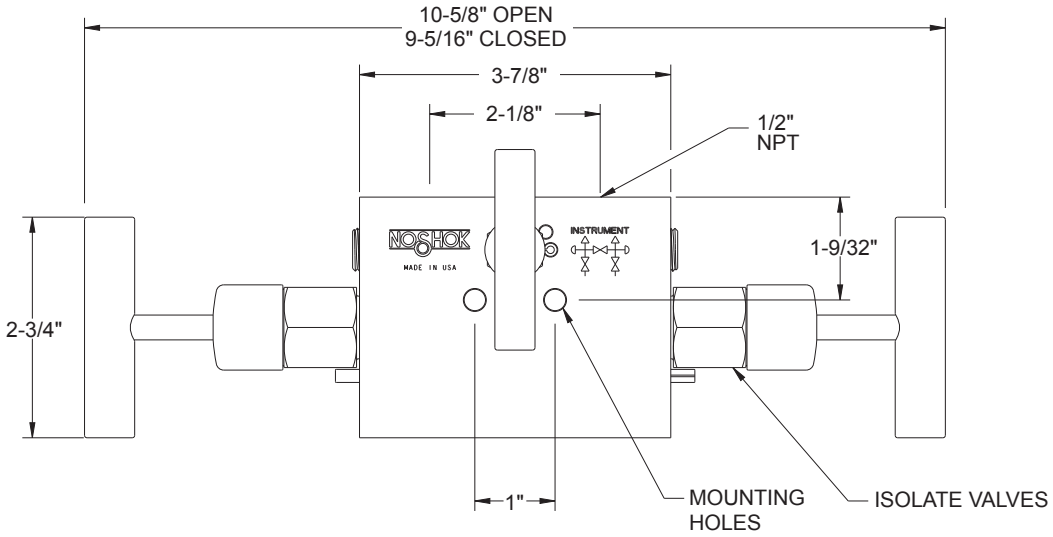

Side View

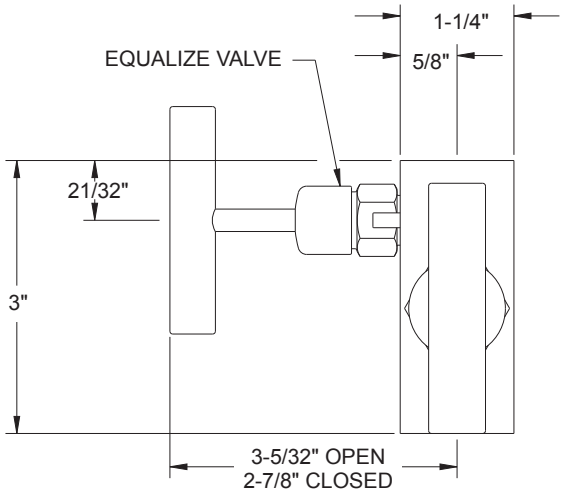

For panel mount and packing dimensions, see pgs. 64-65.

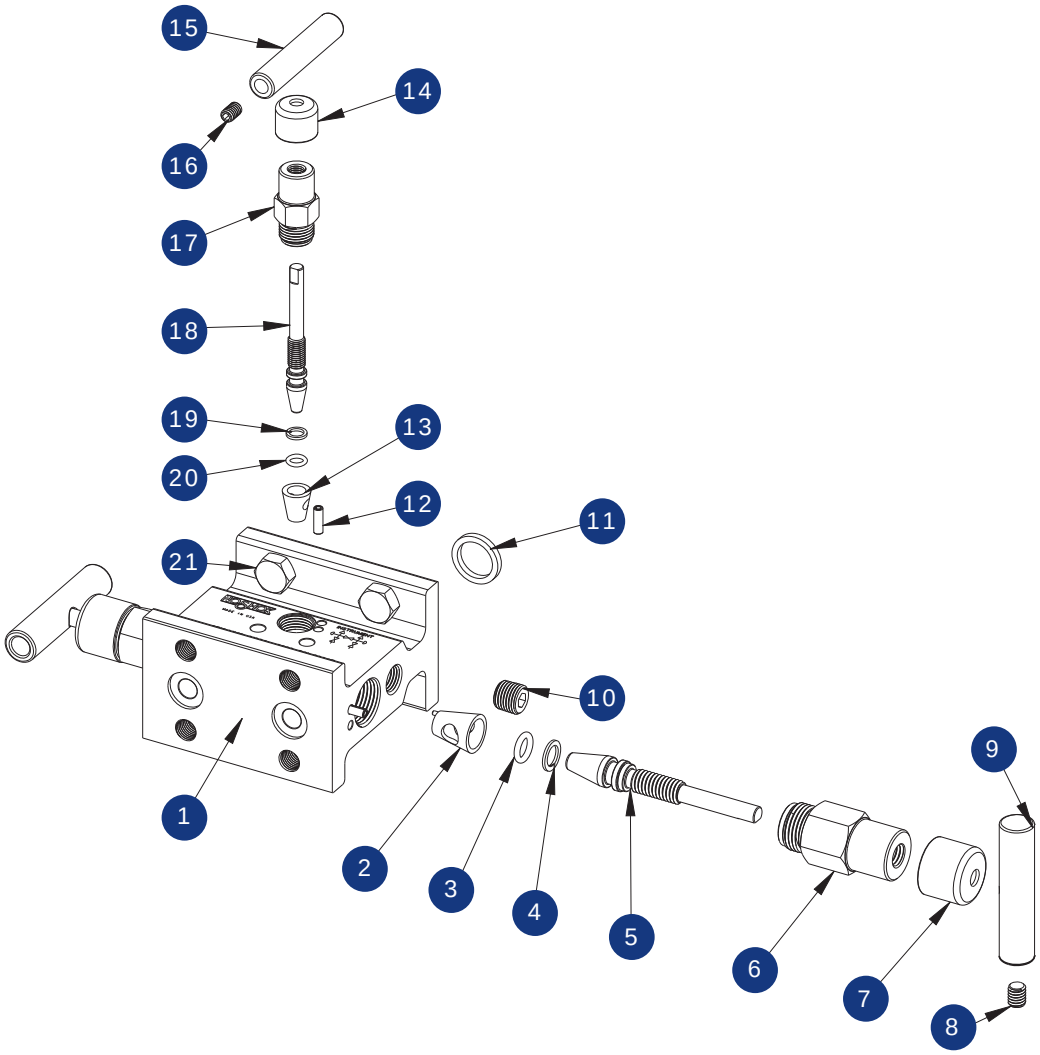

1 Valve body
2 Delrin® seat
3 FKM o-ring
4 PTFE back-up ring
5 Non-rotating stem assembly
6 Valve bonnet
7 Blue dust cap
8 Set screw
9 Valve "T" handle
10 Plug
11 Gasket ring
12 Slotted spring pin
13 Delrin® seat
14 Green dust cap
15 Valve "T" handle
16 Set screw
17 Valve bonnet
18 Valve stem
19 PTFE back-up ring
20 FKM o-ring
21 Head bolt

Mini, Hard Seat & Soft Tip (0.141" Orifice)

3610/3710 SERIES

- Compact design is ideal for installations with limited space, such as behind panels or in cabinets
- Designed for use with differential pressure transmitters incorporating two isolation valves and an equalizing valve in differential pressure measurement
- 100% helium leak tested to 1 x 10^{-4} ml/s for guaranteed performance and reliability
- Soft tip valves feature a patented Delrin® non-rotating soft tip stem, and a back-up metal-to-metal seal **(U.S. Patent 6,820,857)**
- 3610 Series hard seat valves have 10,000 psi pressure rating @ 200°F
- 3710 Series soft tip valves have 6,000 psi pressure rating @ 200°F
- Blow-out proof stem provides a secondary stem seal in the full open position
- FKM o-ring seal and PTFE back-up ring below the stem threads to protect from corrosion and galling; PTFE or Grafoil® packing optional
- All stems are 316 stainless steel
- All stem threads are rolled for strength and ease of operation
- One-piece bonnet with a metal-to-metal seal to the valve body below the bonnet threads
- Vinyl dust caps for bonnets and stems (non-packing)
- Patented body-to-bonnet, metal-to-metal seal is designed to significantly increase the pressure range of the valve **(U.S. Patent 7,758,014)**

Flow Schematic

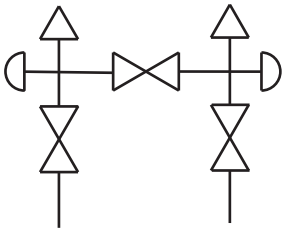

SPECIFICATIONS	
Materials	Zinc-nickel plated steel, electropolished 316 stainless steel
Connection	1/4" NPT
Pressure ratings	Hard seat: 10,000 psi @ 200° F Soft tip: 6,000 psi @ 200° F
Orifice size	0.141"
Flow coefficient	C_V 0.44
Stem seal & type	All 316 stainless steel stems with FKM o-ring and PTFE back-up ring below the threads, PTFE or Grafoil® packing optional
Options	Panel mountings, o-ring materials, handles, packings, regulating stem and stem tips

NOTE: All NOSHOK valve products conform to the MSS SP-99 instrument valves standards, and valves supplied with packing also conform to MSS SP-132 compression packing systems for instrument valves standard.

ORDERING INFORMATION				
SERIES	**3**	3-valve		
SEAT	**6**	Hard seat	**7**	Soft tip
PROCESS TYPE	**1**	Differential pressure		
CONNECTION	**0**	1/4" NPT		
VALVE TYPE	**FFC**	Female-Female, Steel	**FFS**	Female-Female, Stainless Steel

Please consult your local NOSHOK Distributor or NOSHOK, Inc. for availability and delivery information.

EXAMPLE **3 6 1 0 – FFC**

Series.....3-valve
Seat.....Hard seat
Process type..... Differential pressure
Connection.....1/4" NPT
Valve type..... Female-female, steel

To meet all of your specific application requirements, the following additional options are available for these manifold valves. To order all or any of these options, simply add them to the part number as shown in the diagram below.

NOTE 1: The example shown includes ALL possible additional options. Please include ONLY the options required for your application when building your part number. (EXAMPLE: 3610-FFC-P1)

NOTE 2: When a packing option is selected, an o-ring option is NOT available.

NOTE 3: The standard o-ring in all the NOSHOK manifold valves is FKM.

ORDERING INFORMATION - Additional Options								
PACKINGS	**P1**	PTFE	**P2**	Grafoil®**				
STEM TIPS	**T1**	Non-rotating (316 stainless)**	**T4**	PEEK***	**T7**	Ball (ceramic)**	**T10**	Regulating Delrin®***
	T2	Delrin® (Acetal)***	**T5**	Ball (440C stainless)**	**T8**	Ball (Monel)**	**T11**	Regulating PTCFE***
	T3	PTCFE***	**T6**	Ball (carbide)**	**T9**	Regulating hard**	**T12**	Regulating PEEK***
O-RINGS*	**EM1**	EPDM	**KZ1**	FFKM (Kalrez® 3018 or equivalent)			**NB1**	NBR
HANDLES	**HL2**	2-1/2" "T"	**HL4**	1-3/8" Phenolic				
	HL3	1" Round knurled	**HL5**	1-3/4" Phenolic				

Please consult your local NOSHOK Distributor or NOSHOK, Inc. for availability and delivery information.

* Other o-ring materials available on request.
** For 3610 only.
*** For 3710 only.

Please note that the standard o-ring in all the NOSHOK valves is FKM and the standard handles are mini "T" handles (HL1).

The handle material will always match the material of the valve, unless otherwise specified. For example, the mini "T" handle (HL1) on the 3610-FFC will be steel. When only the standard configuration is needed, no additional designations are necessary. Please consult the factory for special application requests.

EXAMPLE with Additional Options **3 6 1 0 – FFC – P1 – T1**

Series.....3-valve
Seat..... Hard seat
Process type ..... Differential pressure
Connection.....1/4" NPT
Valve type..... Female-female, steel
Packing.....PTFE
Stem tip ..... Non-rotating

Dimensions

Female-Female

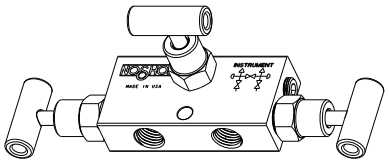

Top View

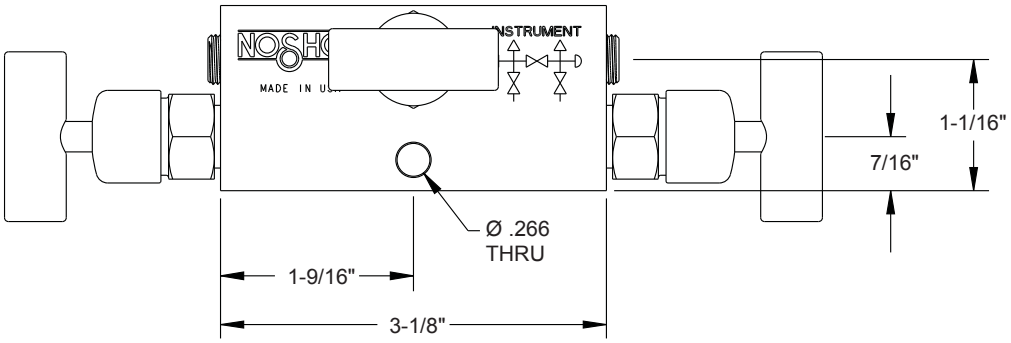

Front View

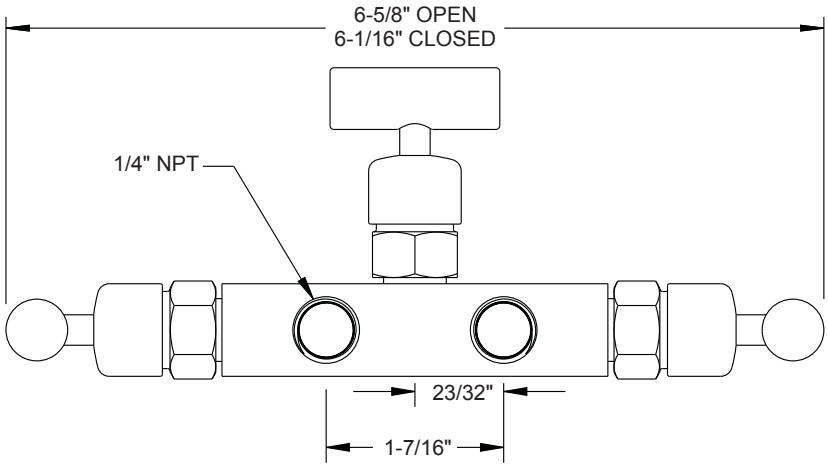

Side View

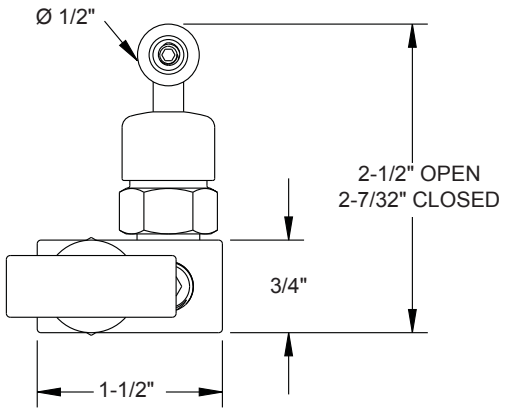

For panel mount and packing dimensions, see pgs. 64-65.

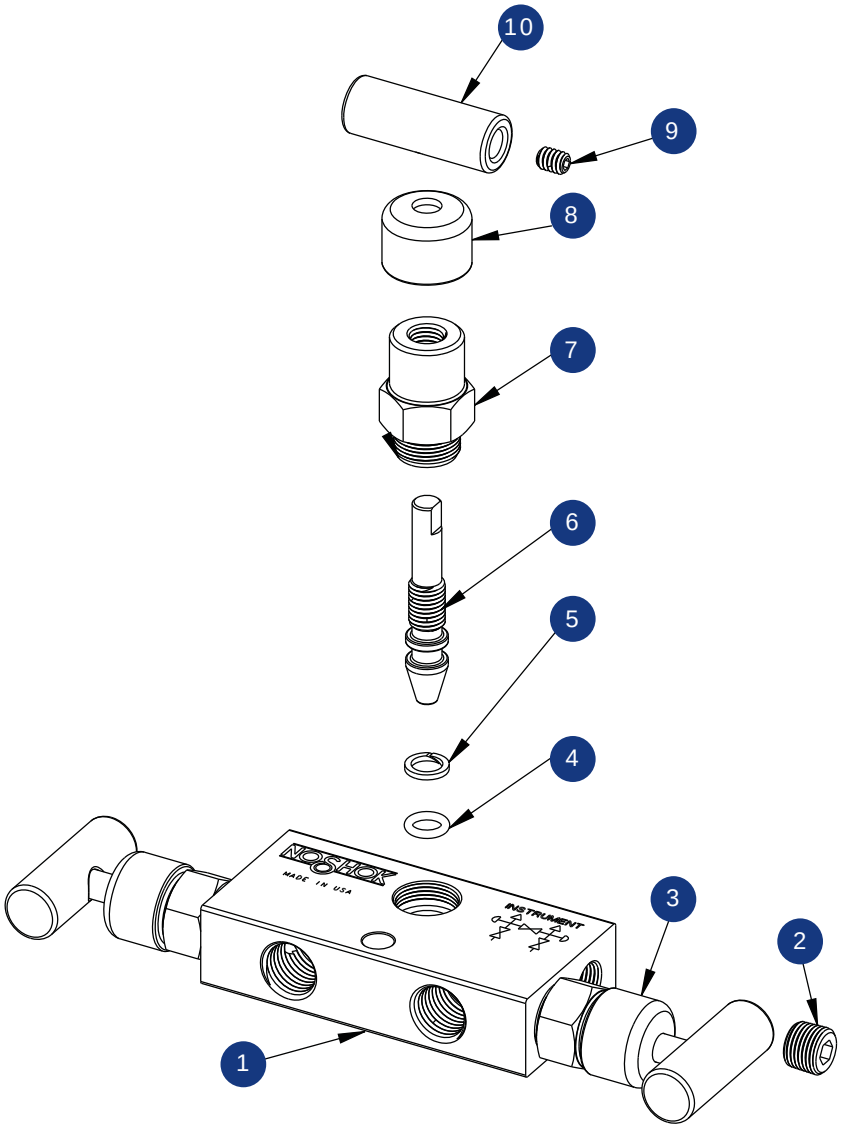

1 Valve body
2 Plug
3 Blue dust cap
4 FKM o-ring
5 PTFE back-up ring
6 Soft tip stem
7 Mini valve bonnet
9 Set screw
8 Green dust cap
10 Mini valve “T” handle

Hard Seat & Soft Seat/Tip

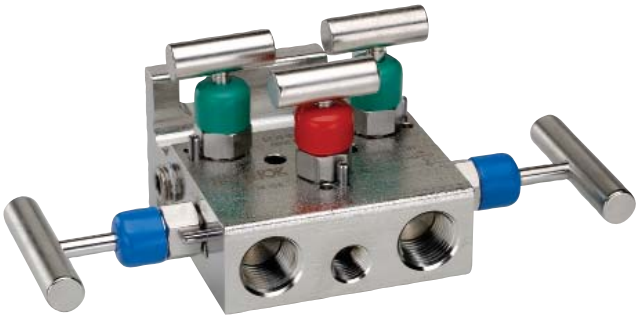

5030/5130 SERIES

- Designed for use with differential pressure transmitters incorporating two isolation valves, two equalizing valves and a vent valve required in natural gas applications
- Soft tip valves feature a patented Delrin® non-rotating soft tip stem, and a back-up metal-to-metal seal **(U.S. Patent 6,820,857)**
- Available in block, single flange, or double flange connection for remote or direct installation
- 100% helium leak tested to 1 x 10^{-4} ml/s for guaranteed performance and reliability
- 5030 Series hard seat valves have 10,000 psi pressure rating @ 200°F
- 5130 Series soft seat/tip valves have 6,000 psi pressure rating @ 200°F
- 5130 Series valves also feature a replaceable Delrin® seat, and straight through porting for bidirectional, high capacity flow and easy roddable cleaning on the block valves
- Blow-out proof stem provides a secondary stem seal in the full open position
- FKM o-ring seal and PTFE back-up ring below the stem threads to protect from corrosion and galling; PTFE or Grafoil® packing optional
- All stems are 316 stainless steel
- All stem threads are rolled for strength and ease of operation
- One-piece bonnet with a metal-to-metal seal to the valve body below the bonnet threads
- Slotted spring pin to prevent accidental loosening
- Vinyl dust caps for bonnets and stems (non-packing)
- Patented body-to-bonnet, metal-to-metal seal is designed to significantly increase the pressure range of the valve **(U.S. Patent 7,758,014)**

Flow Schematic

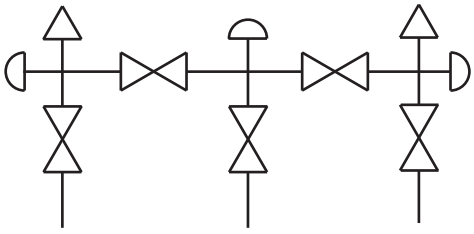

SPECIFICATIONS	
Materials	Zinc-nickel plated carbon steel, electropolished 316 stainless steel
Connection	Flange-flange, 1/2" NPT-flange, 1/2" NPT-1/2" NPT
Pressure ratings	Hard seat: 10,000 psi @ 200° F Soft seat/tip: 6,000 psi @ 200° F
Orifice size	0.187"
Flow coefficient	Hard seat: C_V 0.44 Soft seat/tip: C_V 0.76
Stem seal & type	All 316 stainless steel stems with FKM o-ring and PTFE back-up ring below the threads.
Additional features	Two static (test) ports, color coded vinyl bonnet and stem dust cap, patented soft seat/tip stem design on equalizing and vent valves
Options	Panel mountings, o-ring materials, handles, packings, regulating stem and stem tips

NOTE: All NOSHOK valve products conform to the MSS SP-99 instrument valves standards, and valves supplied with packing also conform to MSS SP-132 compression packing systems for instrument valves standard.

ORDERING INFORMATION						
SERIES	**5** 5-valve					
SEAT/ORIFICE	**0** Hard seat		**1** Soft seat/tip			
PROCESS TYPE	**3** Natural gas flow					
CONNECTION	**0** 1/2" NPT or flange					
VALVE TYPE	**MFC** Flange-Female, Steel **FFC** Female-Female, Steel		**MFS** Flange-Female, Stainless Steel **FFS** Female-Female, Stainless Steel		**MMC** Flange-Flange, Steel **MMS** Flange-Flange, Stainless Steel	

Please consult your local NOSHOK Distributor or NOSHOK, Inc. for availability and delivery information.

EXAMPLE **5 1 3 0 – MFC**

Series.....5-valve
Seat..... Soft seat/tip
Process type .....Natural gas flow
Connection..... 1/2" NPT standard
Valve type..... Flange-female, steel

To meet all of your specific application requirements, the following additional options are available for these manifold valves. To order all or any of these options, simply add them to the part number as shown in the diagram below.

NOTE 1: The example shown includes ALL possible additional options. Please include ONLY the options required for your application when building your part number. (EXAMPLE: 5130-MFC-P1)

NOTE 2: When a packing option is selected, an o-ring option is NOT available.

NOTE 3: The standard o-ring in all the NOSHOK manifold valves is FKM and T1 hard non-rotating (316SS standard) stem tip is the only option available for the Isolation valves on the 5130 Series. All other stem tip options are available for the equalize and vent valves.

ORDERING INFORMATION - Additional Options								
SOFT SEATS	**PK1** PEEK		**KF1** PCTFE					
PACKINGS	**P1** PTFE		**P2** Grafoil®**					
STEM TIPS	**T1** Non-rotating (316 stainless) **T2** Delrin® (Acetal)*** **T3** PTCFE***		**T4** PEEK*** **T5** Ball (440C stainless)** **T6** Ball (carbide)**		**T7** Ball (ceramic)** **T8** Ball (Monel)** **T9** Regulating hard**		**T10** Regulating Delrin®*** **T11** Regulating PTCFE*** **T12** Regulating PEEK***	
O-RINGS*	**EM1** EPDM		**KZ1** FFKM (Kalrez® 3018 or equivalent)				**NB1** NBR	
HANDLES	**HL1** 1-13/16" Mini "T" **HL3** 1" Round knurled		**HL4** 1-3/8" Phenolic **HL5** 1-3/4" Phenolic					

Please consult your local NOSHOK Distributor or NOSHOK, Inc. for availability and delivery information.

* Other o-ring materials available on request.
** For 5030 only.
*** For 5130 only.

Please note that the standard o-ring in all the NOSHOK valves is FKM and the standard handles are isolation "T" handles (HL2) and equalizing & vent mini "T" handles (HL7).

The handle material will always match the material of the valve, unless otherwise specified. For example, handles on the 5130-MFC will be steel. When only the standard configuration is needed, no additional designations are necessary. Please consult the factory for special application requests.

EXAMPLE with Additional Options **5 1 3 0 – MFC – PK1 – P1 – T1**

Series..... 5-valve
Seat.....Soft seat/tip
Process type ..... Natural gas flow
Connection.....1/2" NPT standard
Valve type.....Flange-female, steel
Soft seat ..... PEEK
Packing.....PTFE
Stem tip ..... Non-rotating

Dimensions

Flange-Flange

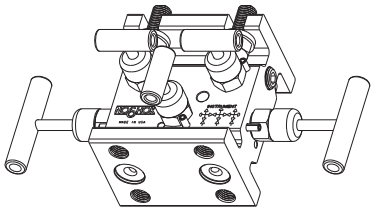

Top View

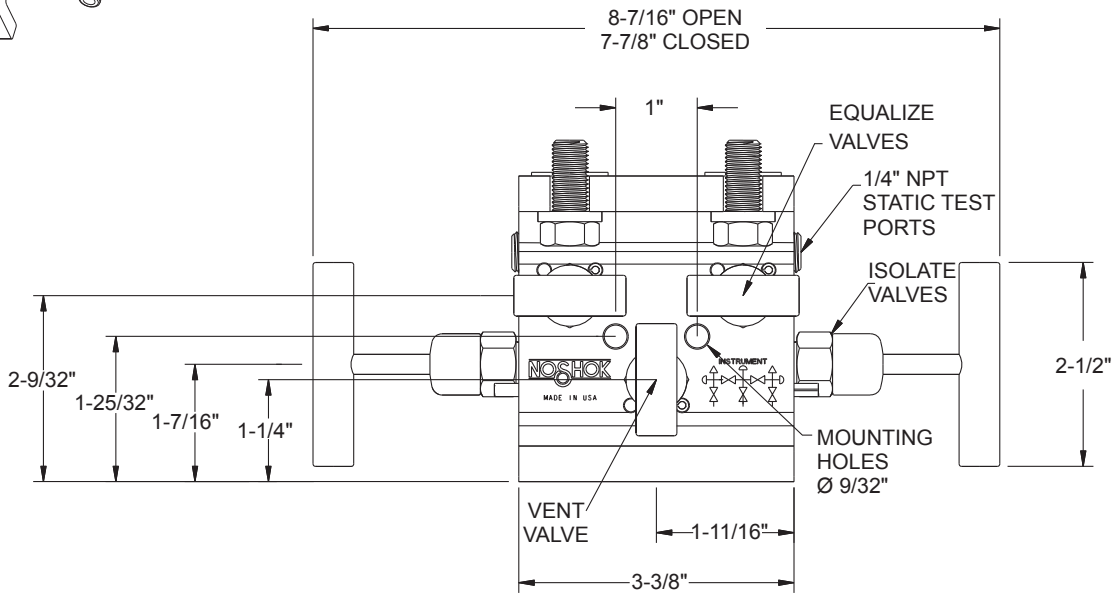

Front View

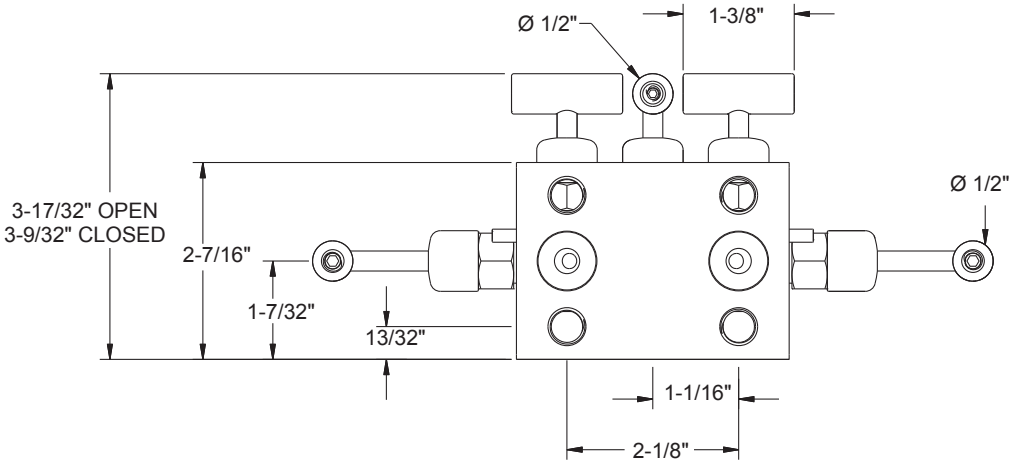

Side View

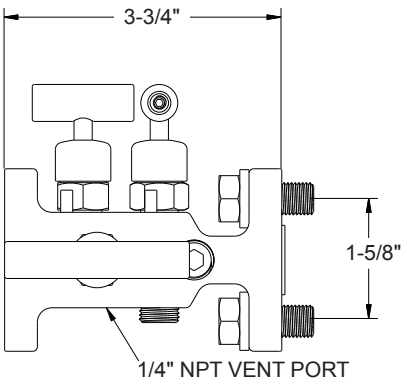

Flange-Female

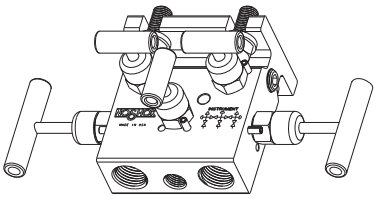

Top View

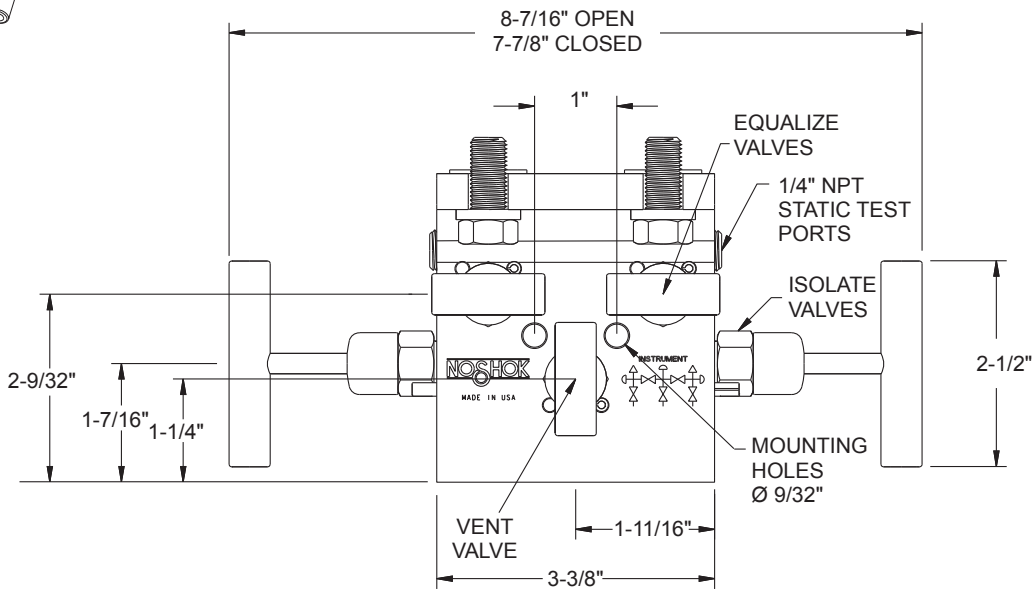

Front View

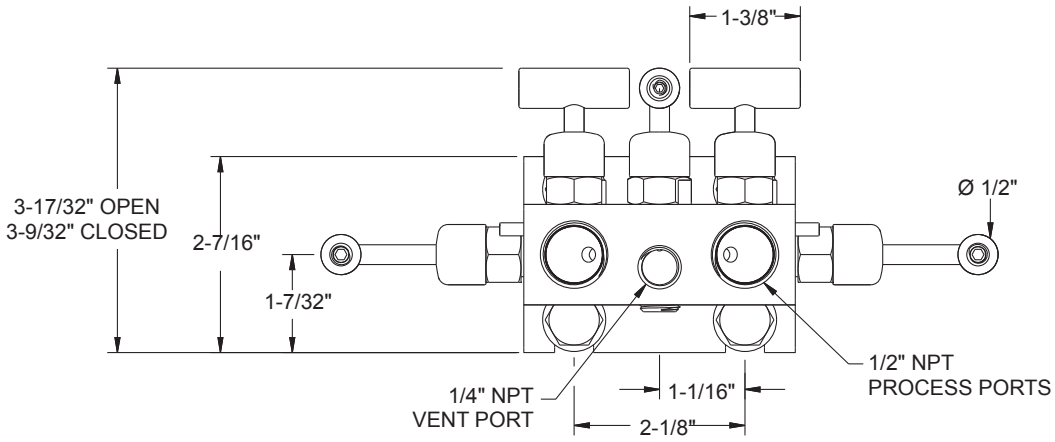

Side View

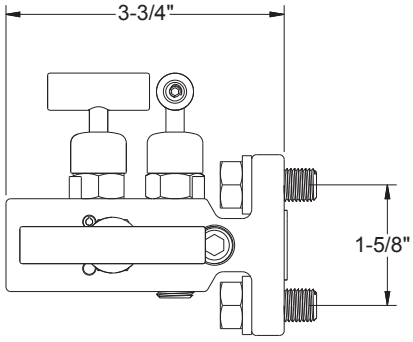

Dimensions

Female-Female

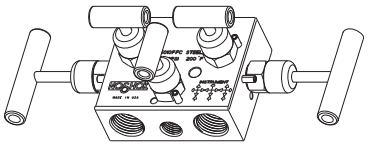

Top View

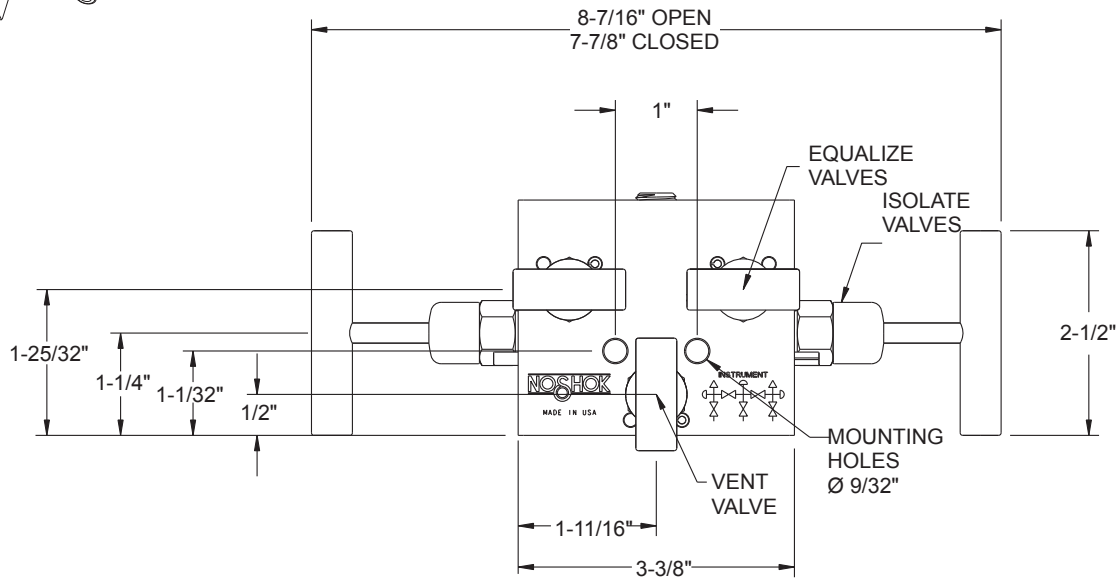

Front View

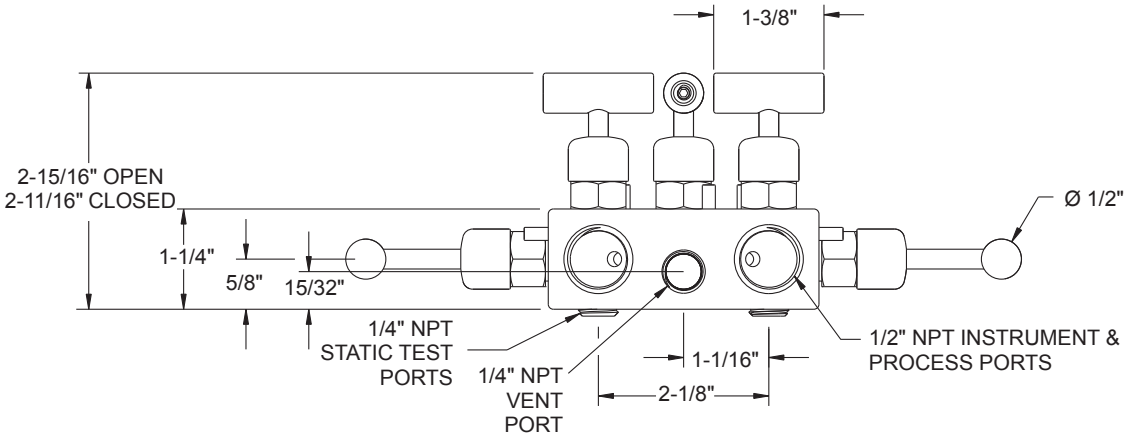

Side View

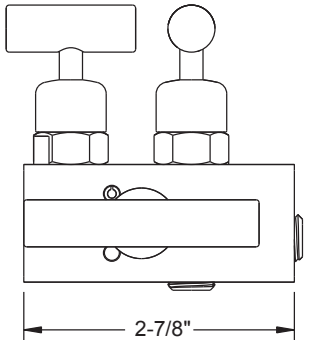

For panel mount and packing dimensions, see pgs. 64-65.

Hard Seat

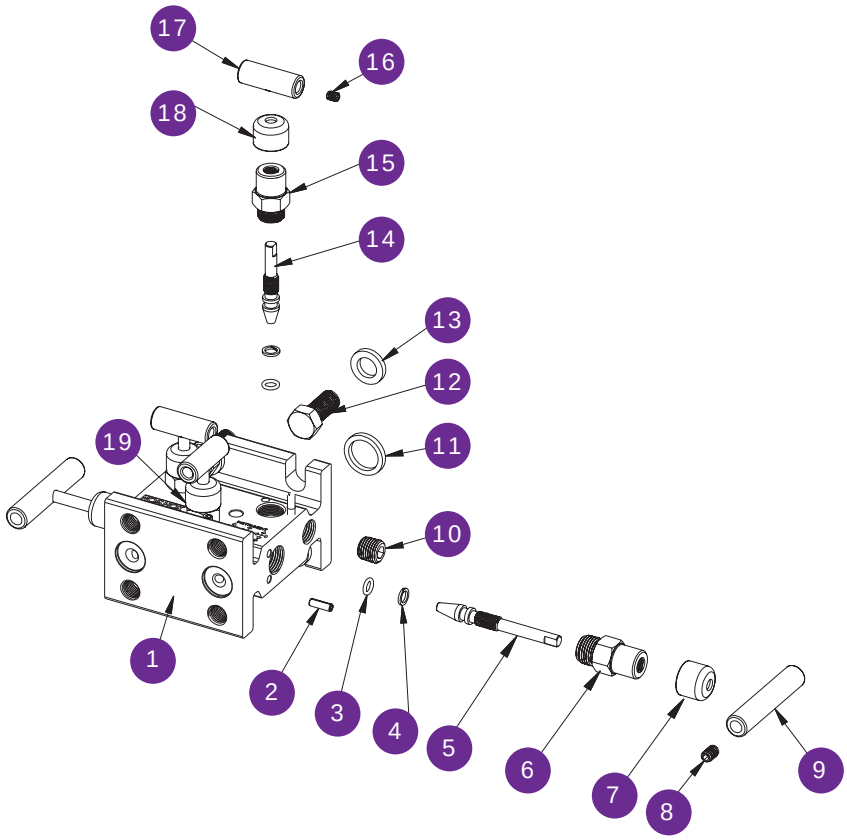

1 Valve body
2 Slotted spring pin
3 FKM o-ring
4 PTFE back-up ring
5 Valve stem
6 Valve bonnet
7 Blue dust cap
8 Set screw
9 Valve “T” handle
10 Plug
11 Gasket ring
12 Head bolt
13 Washer
14 Mini valve stem
15 Mini valve bonnet
16 Set screw
17 Mini valve “T” handle
18 Green dust cap
19 Red dust cap

Soft Seat

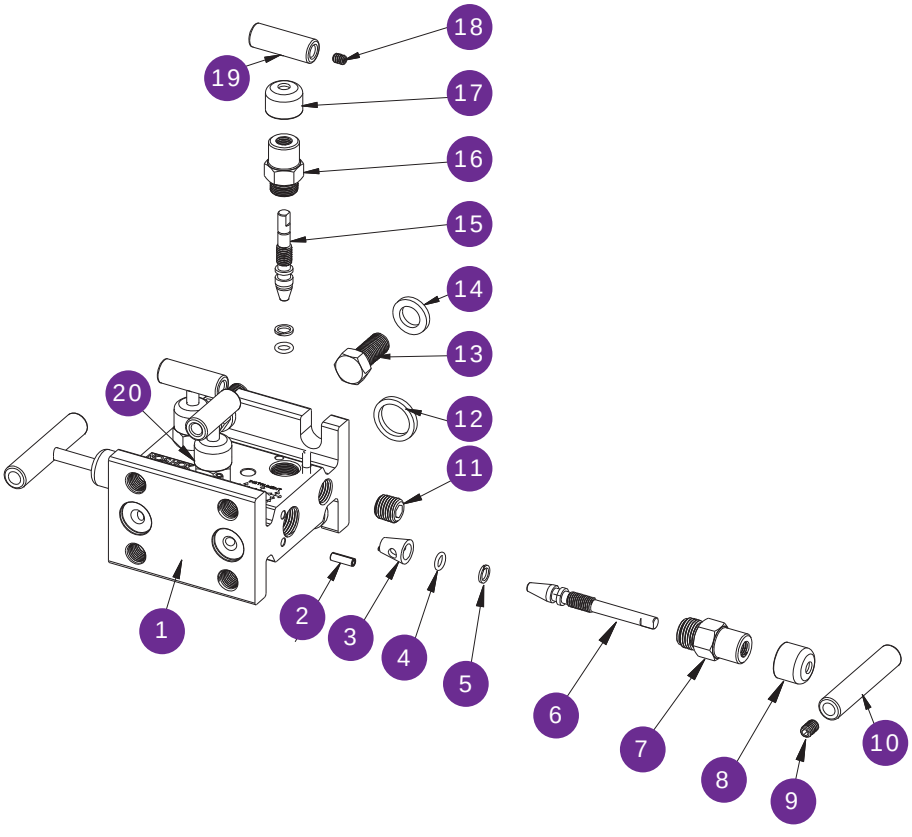

1 Valve body
2 Slotted spring pin
3 Delrin® seat
4 FKM o-ring
5 PTFE back-up ring
6 Valve stem
7 Valve bonnet
8 Blue dust cap
9 Set screw
10 Valve “T” handle
11 Plug
12 Gasket ring
13 Head bolt
14 Washer
15 Soft tip stem
16 Mini valve bonnet
17 Green dust cap
18 Set screw
19 Mini valve “T” handle
20 Red dust cap

Soft Seat/Tip (0.375" Orifice)

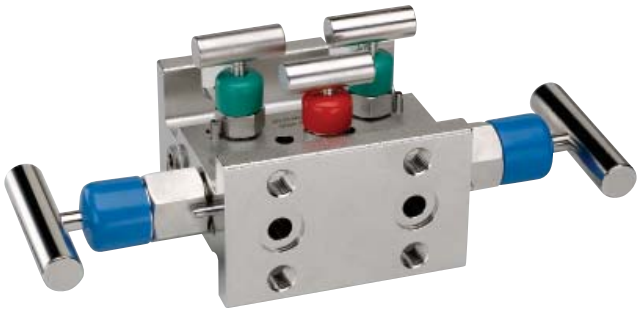

5530 SERIES

- Designed for use with differential pressure transmitters incorporating two isolation valves, two equalizing valves and a vent valve in natural gas applications
- Soft tip valves feature a patented Delrin® non-rotating soft tip stem, and a back-up metal-to-metal seal **(U.S. Patent 6,820,857)**
- Available in block, single flange, or double flange connection for remote or direct installation
- 100% helium leak tested to 1 x 10^{-4} ml/s for guaranteed performance and reliability
- Soft seat design has 6,000 psi pressure rating @ 200°F
- Features a replaceable Delrin® seat, and straight through porting for bidirectional, high capacity flow and easy roddable cleaning on the block valves
- Blow-out proof stem provides a secondary stem seal in the full open position
- FKM o-ring seal and PTFE back-up ring below the stem threads to protect from corrosion and galling
- All stems are 316 stainless steel
- All stem threads are rolled for strength and ease of operation
- One-piece bonnet with a metal-to-metal seal to the valve body below the bonnet threads
- Slotted spring pin to prevent accidental loosening
- Vinyl dust caps for bonnets and stems
- Non-rotating stem tip standard on isolation valves

Flow Schematic

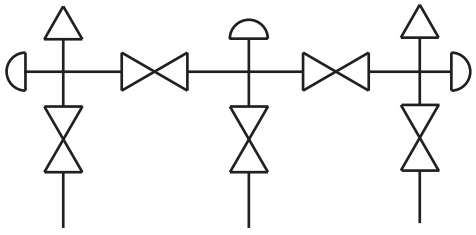

SPECIFICATIONS	
Materials	Zinc-nickel plated steel, electropolished 316 stainless steel
Connections	Flange-flange 1/2" NPT-flange 1/2" NPT-1/2" NPT
Pressure ratings	6,000 psi @ 200°F
Orifice size	0.375"
Flow coefficient	C_V 3.0
Steam seal & type	All 316 stainless steel stems with FKM o-ring and PTFE back-up ring below the threads
Additional features	Two static (test) ports, color coded vinyl bonnet and stem dust cap, patented soft tip stem design on equalizing and vent valves

NOTE: All NOSHOK valve products conform to the MSS SP-99 instrument valves standards, and valves supplied with packing also conform to MSS SP-132 compression packing systems for instrument valves standard.

ORDERING INFORMATION						
SERIES	**5**	5-valve				
SEAT	**5**	Soft seat/tip .375" orifice				
PROCESS TYPE	**3**	Natural gas flow				
CONNECTION	**0**	1/2" NPT standard or flange				
VALVE TYPE	**MFC**	Flange-Female, Steel	**MFS**	Flange-Female, Stainless Steel	**MMC**	Flange-Flange, Steel
	FFC	Female-Female, Steel	**FFS**	Female-Female, Stainless Steel	**MMS**	Flange-Flange, Stainless Steel

Please consult your local NOSHOK Distributor or NOSHOK, Inc. for availability and delivery information.

EXAMPLE **5 5 3 0 – MFC**

Series.....5-valve
Seat..... Soft seat/tip
Process type .....Natural gas flow
Connection..... 1/2" NPT standard
Valve type..... Flange-female, steel

To meet all of your specific application requirements, the following additional options are available for these manifold valves. To order all or any of these options, simply add them to the part number as follows:

ORDERING INFORMATION - Additional Options						
SOFT SEATS	**PK1**	PEEK	**KF1**	PCTFE		
O-RINGS*	**EM1**	EPDM	**KZ1**	FFKM (Kalrez® 3018 or equivalent)	**NB1**	NBR
HANDLES	**HL3**	1" Round knurled	**HL4**	1-3/8" Phenolic		

Please consult your local NOSHOK Distributor or NOSHOK, Inc. for availability and delivery information.

* Other o-ring materials available on request.

Please note that the standard o-ring in all the NOSHOK valves is FKM and the standard handles are isolation “T” handles (HL8) and equalizing “T” handles (HL7).

The handle material will always match the material of the valve, unless otherwise specified. For example, the “T” handle on the 5530-MFC will be steel. When only the standard configuration is needed, no additional designations are necessary. Please consult the factory for special application requests.

EXAMPLE with Additional Options **5 5 3 0 – MFC – PK1 – KZ1**

Series.....5-valve
Seat..... Soft seat
Process type ..... Natural gas
Connection.....1/2" NPT standard or flange
Valve type.....Flange-female, steel
Soft seat .....PEEK
O-ring.....FFKM

Dimensions

Flange-Flange

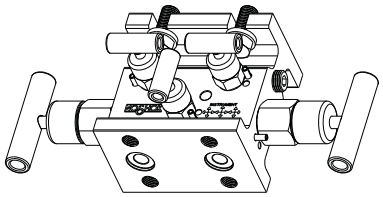

Top View

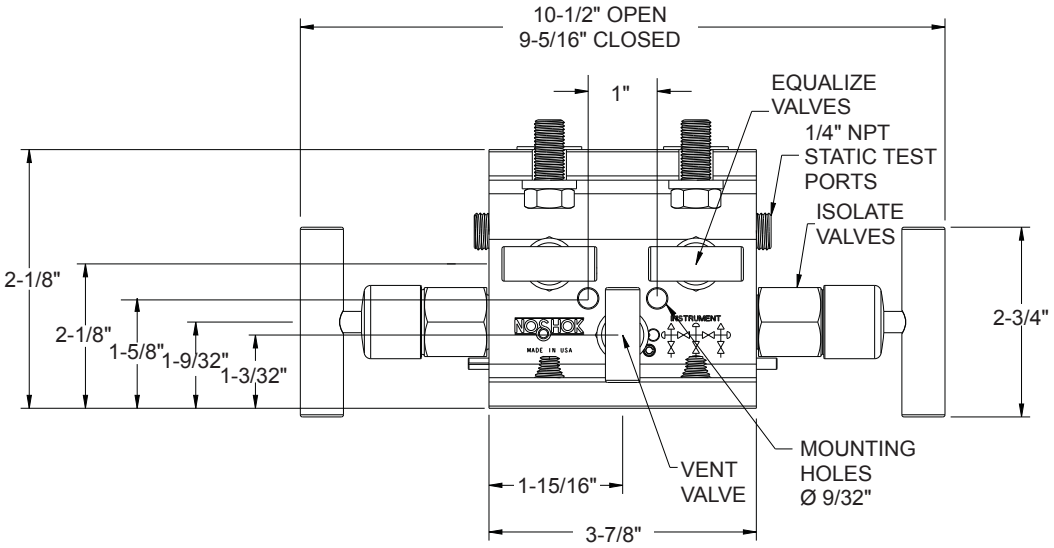

Front View

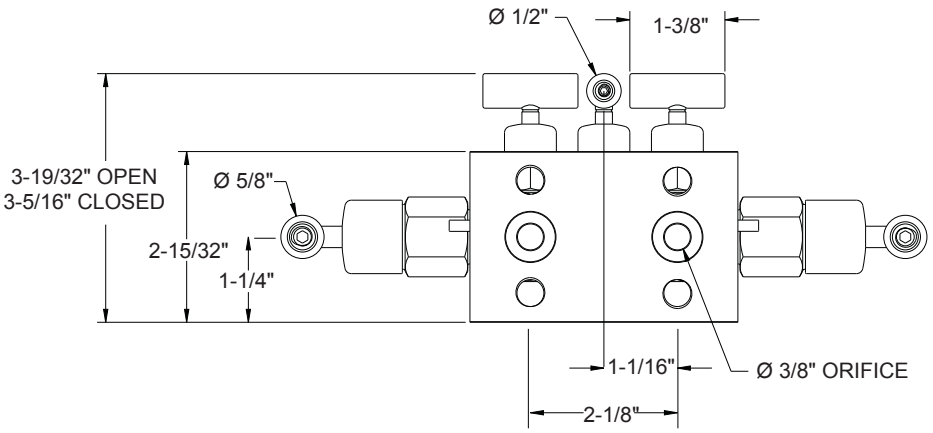

Side View

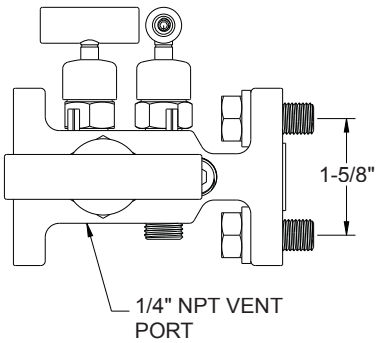

Flange-Female

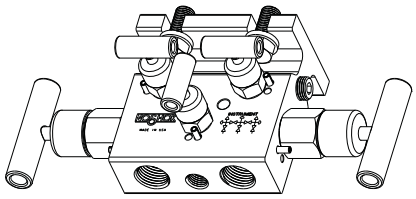

Top View

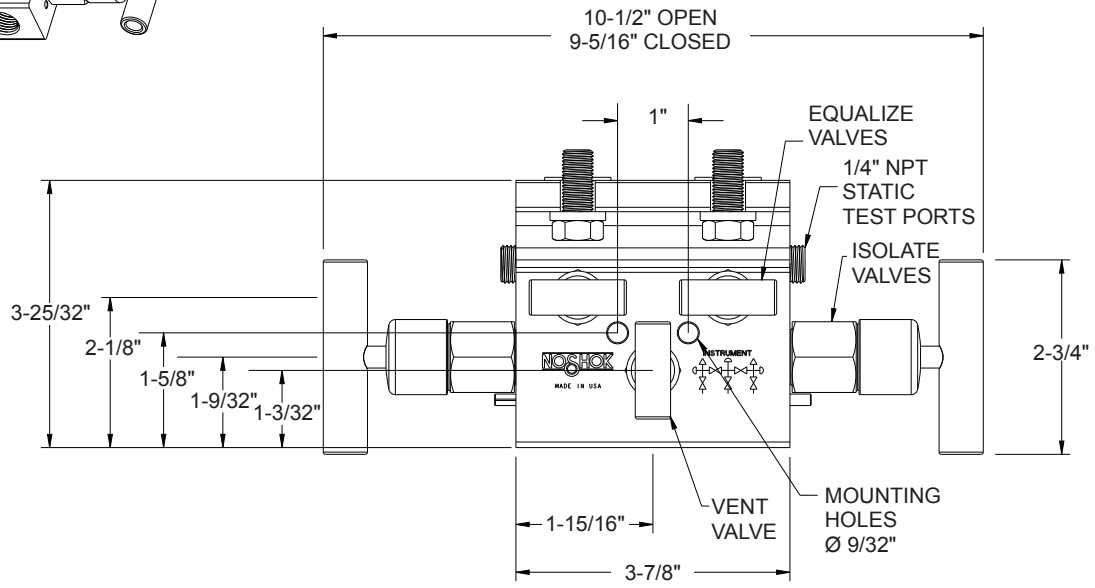

Front View

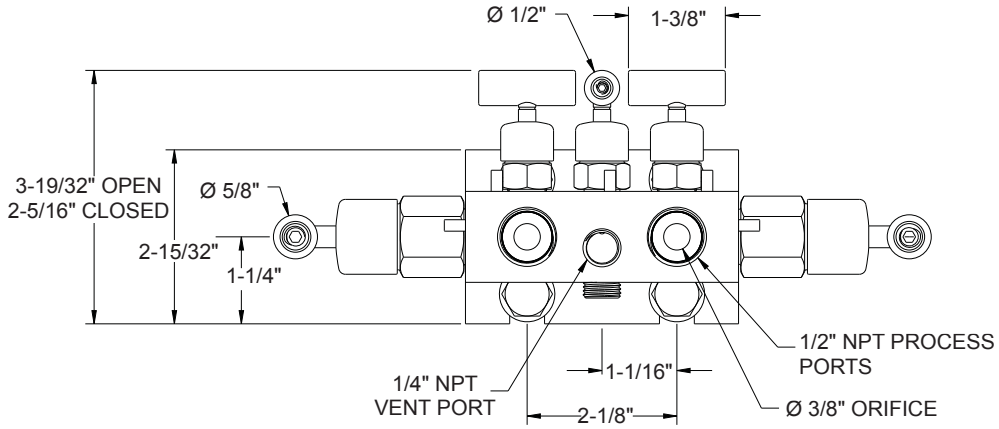

Side View

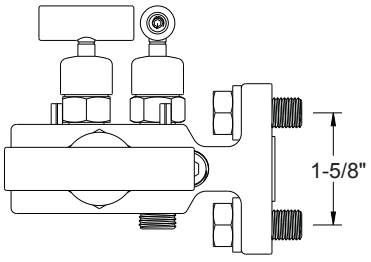

Dimensions

Female-Female

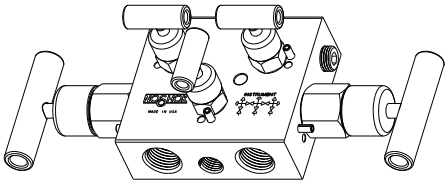

Top View

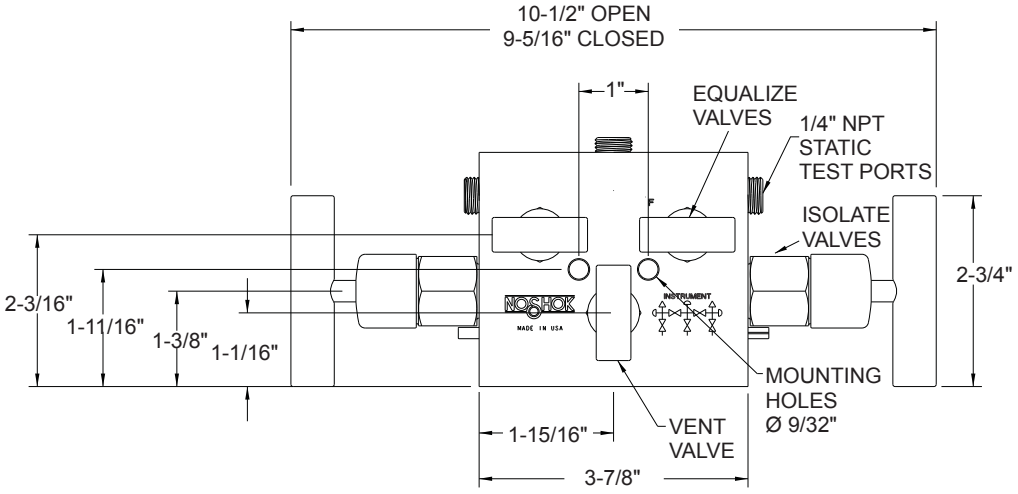

Front View

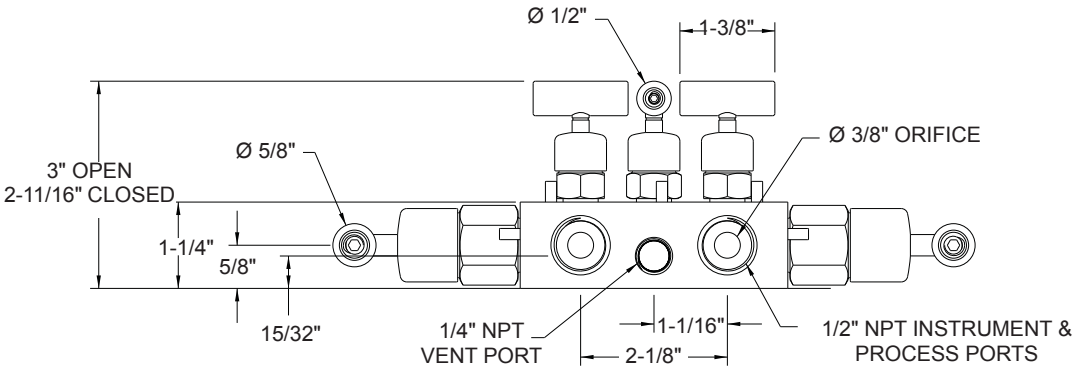

Side View

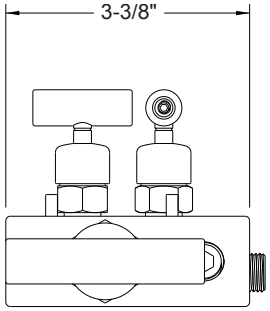

For panel mount and packing dimensions, see pgs. 64-65.

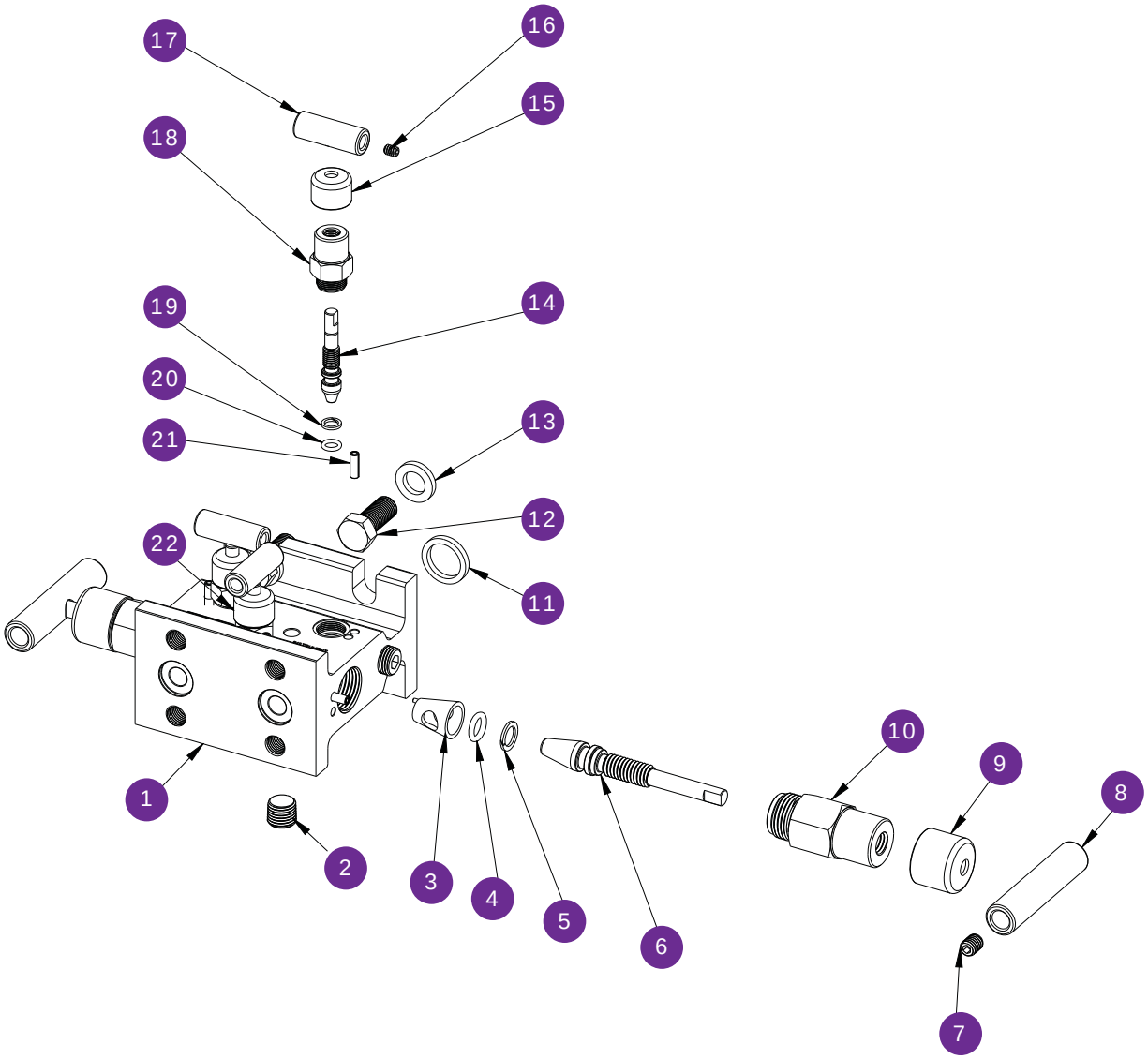

1 Valve body
2 Plug
3 Delrin® seat
4 FKM o-ring
5 PTFE back-up ring
6 Non-rotating stem
7 Set screw
8 Valve “T” handle
9 Blue dust cap
10 Valve bonnet
11 Gasket ring
12 Head bolt
13 Washer
14 Soft tip stem
15 Green dust cap
16 Set screw
17 Mini valve “T” handle
18 Mini valve bonnet
19 PTFE back-up ring
20 FKM o-ring
21 Slotted spring pin
22 Red dust cap

Manifold Valve Accessories

DIELECTRIC KIT

The dielectric kit is designed to maintain the integrity and reliability of the pipeline and piping system through safety and corrosion protection. Dielectric kits provide a non-conductive barrier between the process piping and the instrument and isolate components from the effects of electrical current. By eliminating metal to metal contact, current is halted to prevent corrosion and aid in the cathodic protection of the system.

Specifications

- Material: Delrin®, PVC
- Max operating temp 150°F
- Dielectric strength exceeds 1/32 air arc gap approximately 2,500 Vdc

FUTBOLS

Futbols (flange adapters) bolt to the process side of a flange-flange manifold to allow connection of process flange taps or process root valves. Futbols also allow flanges to be connected to threaded process piping while maintaining the ease of removal or repair of the manifold if maintenance is required. The futbols provide a 1/16" offset connection from the bolt holes to give connection centers of 2", 2-1/8" or 2-1/4".

Specifications

- Material: zinc-nickel plated steel, 316 stainless steel
- Connections: 1/2" NPT
- Kit Includes : (2) Futbols, (4) hex bolts 7/16"-20, (2) PTFE face seals

MANIFOLD MOUNTING KIT

The manifold mounting kit is designed for direct or remote mounting to a two inch pipe stand. It can be used with any NOSHOK 2, 3 or 5-valve manifold by mounting a steel or stainless steel bracket directly to the manifold body.

Δ PRESSURE TO STATIC PLATE

Used on gas pipelines, the differential pressure to static adapter plate is used to mount a differential pressure transmitter and a static pressure transmitter to a five valve flange-flange manifold. They are available in zinc-nickel plated steel, electropolished stainless steel. An integral mini style bleed valve is incorporated in the plate and a 1/4" NPT vent plug is provided. The mini style bleed valve is equipped with a FKM o-ring and PTFE back-up ring below the stem threads to protect against corrosion and galling. Stem threads are rolled for greater strength and ease of operation and all NOSHOK valves are 100% helium leak tested for guaranteed reliability. Maximum pressure rating of 10,000 psi for steel & stainless models.

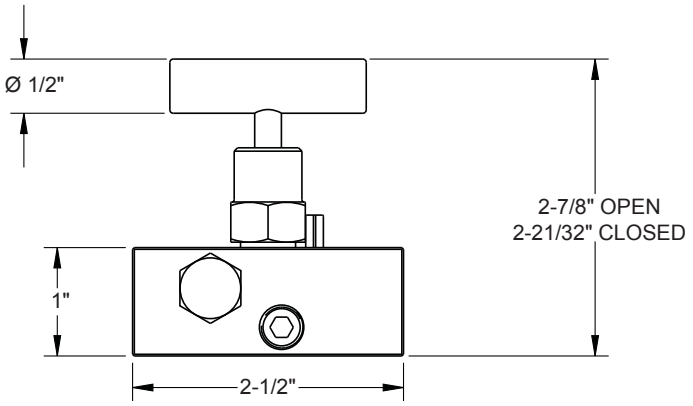

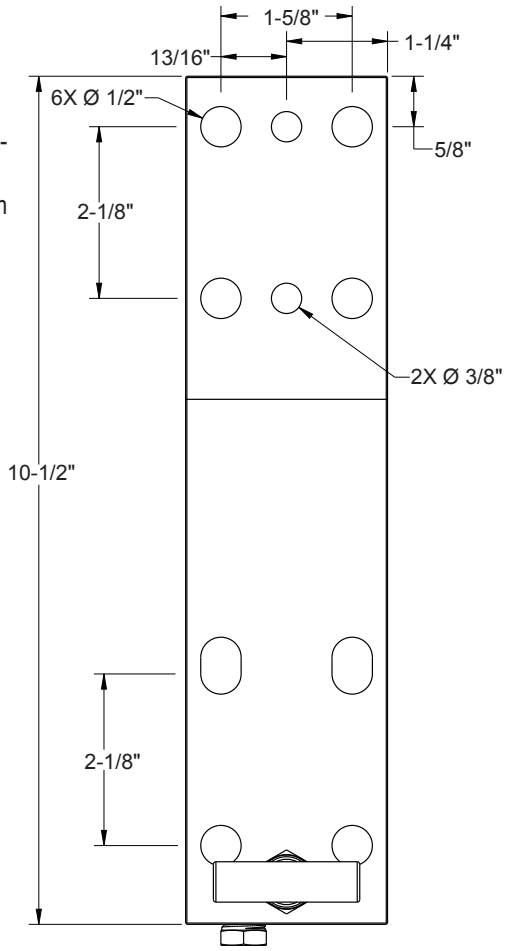

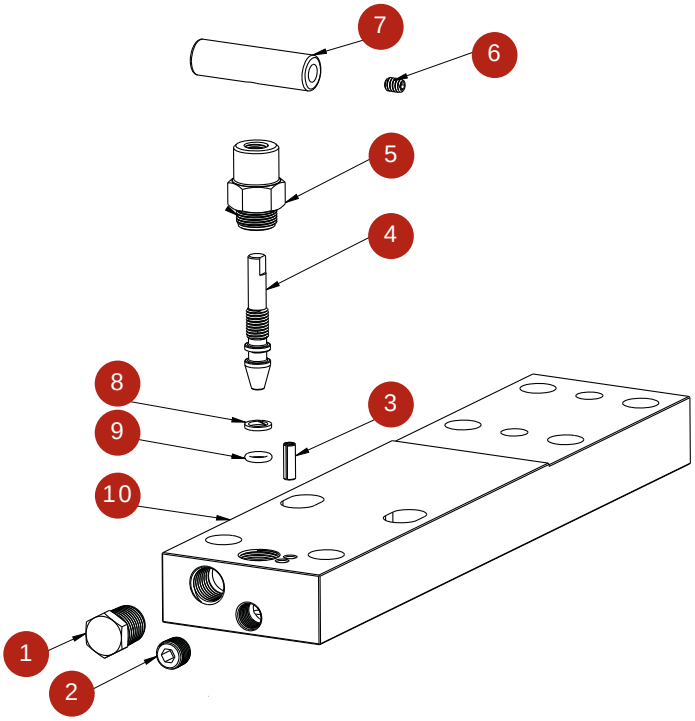

1 1/4" NPT hex head pipe plug
2 1/8" NPT socket head plug
3 Slotted spring pin
4 Mini valve stem
5 Mini valve bonnet
6 Set screw
7 Mini valve “T” handle
8 PTFE back-up ring
9 FKM o-ring
10 Differential pressure to static adapter body

STATIC ADAPTERS

The static adapter is used to join threaded ports to a flange style connection. They are often used to join the NPT port of a static transmitter with a flange mounted connection on a differential pressure to static adapter plate. They are available in zinc-nickel plated steel and electropolished 316 stainless steel.

Specifications

- Material: zinc-nickel plated steel, 316 stainless steel
- Connections: 1/2" NPT male-flange
- Other configurations available

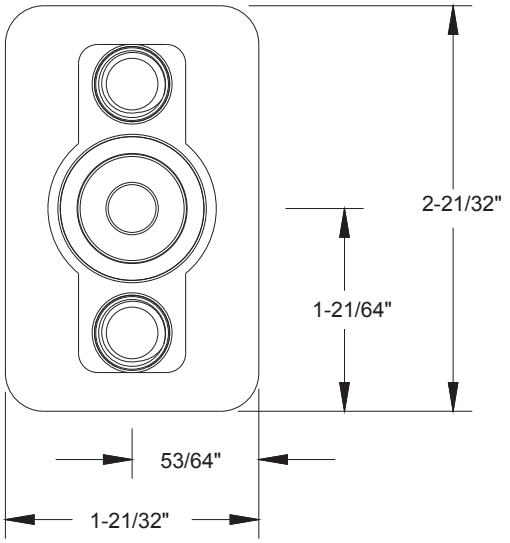

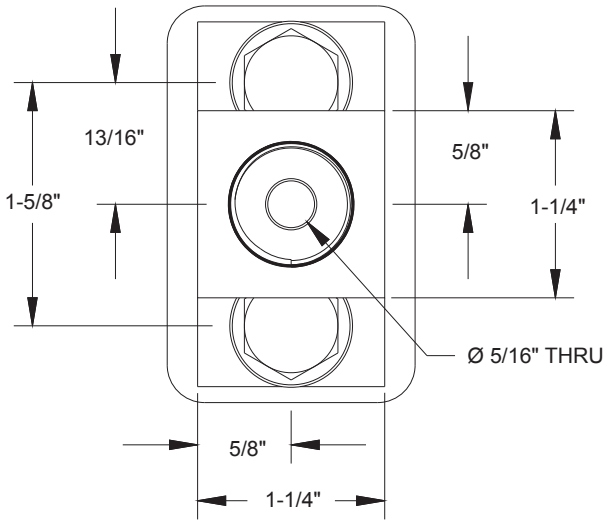

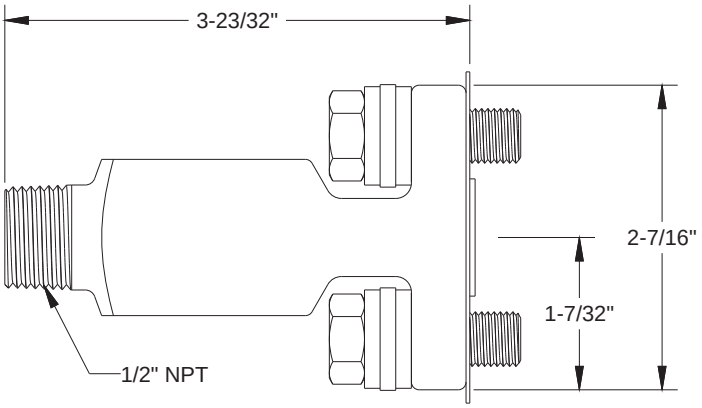

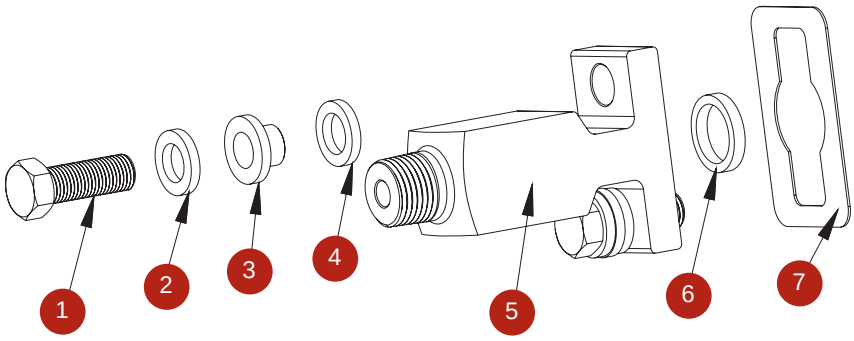

1 7/16-20 x 1-1/4" bolt
2 7/16" ID flat washer
3 Dielectric bushing
4 1/2" ID flat washer
5 Adapter body
6 Gasket ring
7 Dielectric shim

Mounting Diagrams for 2000, 3000 & 5000 Series Manifold Valves

2000 & 3000 Series Mounting Kit Flange-Flange

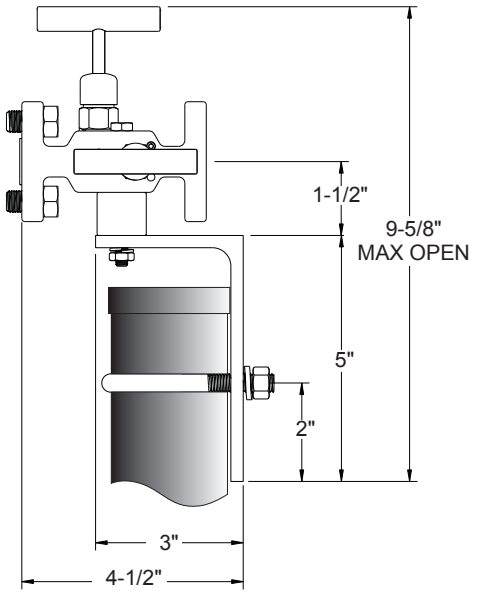

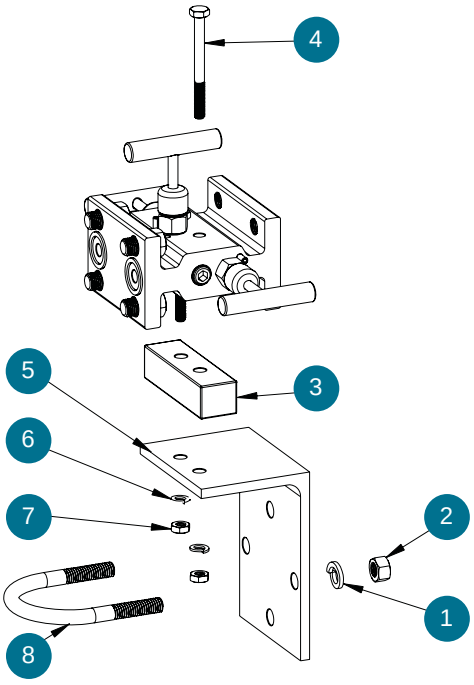

1 Lock washer
2 Nut
3 Spacer
4 Bolt
5 Bracket
6 Lock washer
7 Nut
8 U-bolt

2000 & 3000 Series Mounting Kit Flange-NPT, NPT-NPT

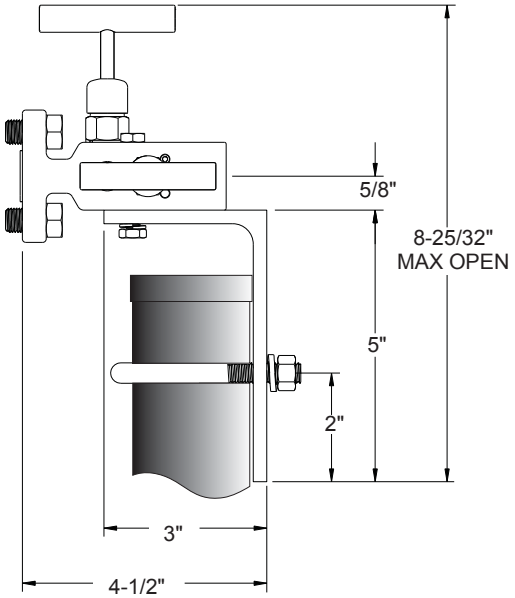

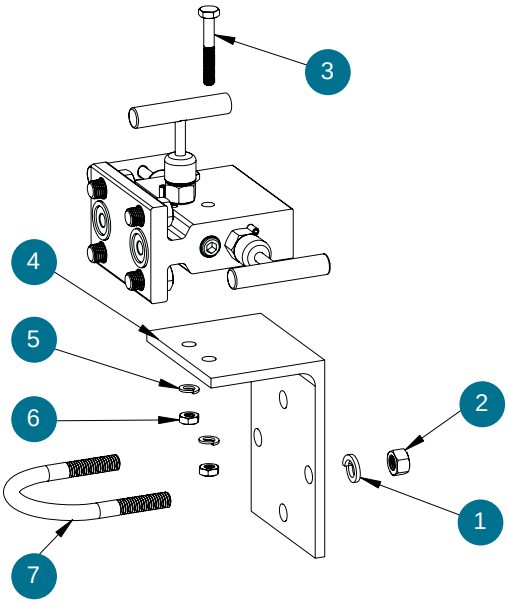

1 Lock washer
2 Nut
3 Bolt
4 Bracket
5 Lock washer
6 Nut
7 U-bolt

5000 Series Mounting Kit
Flange-Flange

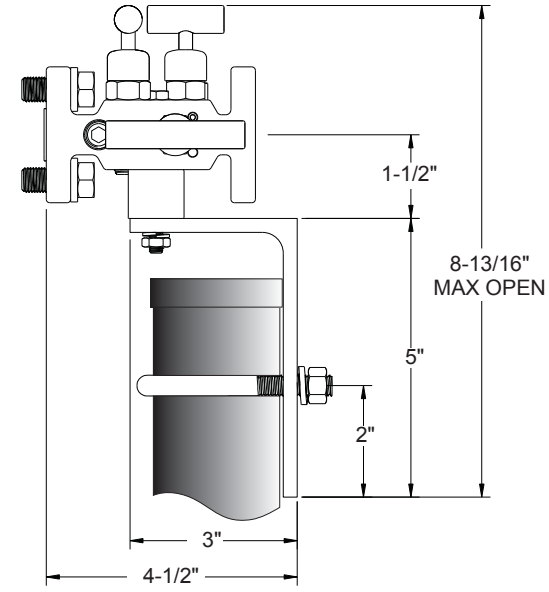

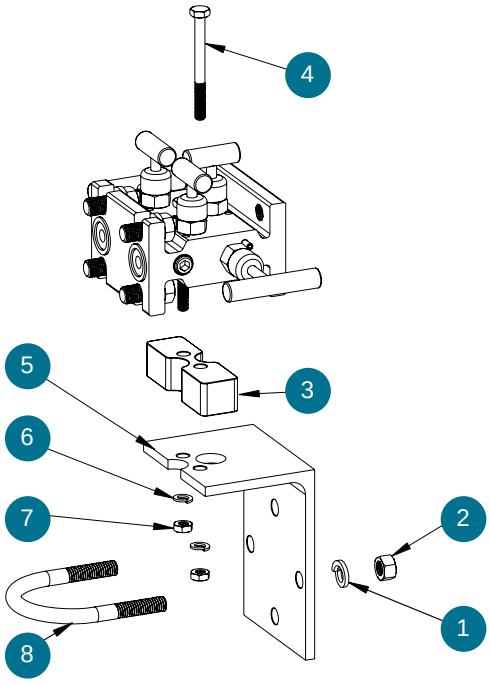

1 Lock washer
2 Nut
3 Spacer
4 Bolt
5 Bracket
6 Lock washer
7 Nut
8 U-bolt

5000 Series Mounting Kit
Flange-NPT, NPT-NPT

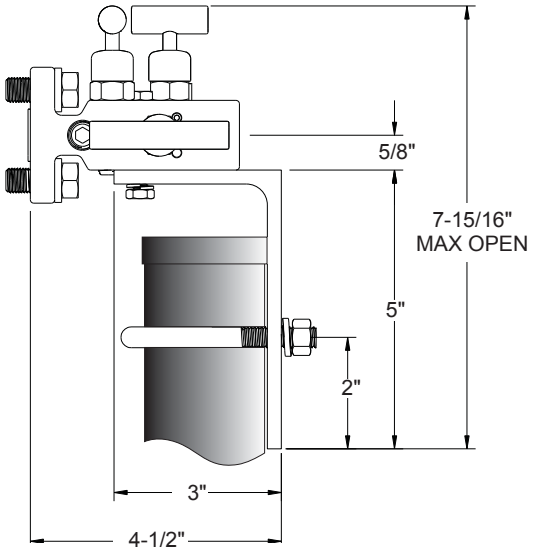

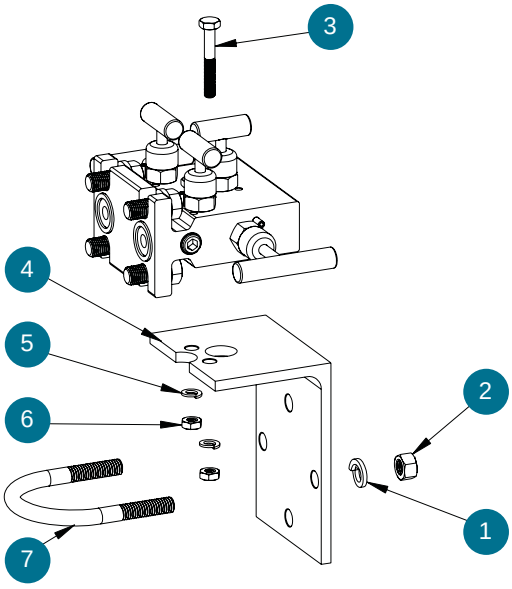

1 Lock washer
2 Nut
3 Bolt
4 Bracket
5 Lock washer
6 Nut
7 U-bolt

NOSHOK Needle Valves Reference Chart

		Mini				Multiport		Standard		Block & Bleed		Bleed		2-Valve Block & Bleed		3-Valve Double Block & Bleed
		Hard Seat		Soft Tip		Hard Seat	Soft Seat	Hard Seat	Soft Seat	Hard Seat	Soft Seat	Hard Seat	Soft Tip	Hard Seat	Soft Seat/Tip	Hard Seat
	SERIES	100	140	150	190	200	300	400	500	600	700	800	850	2070	2170	3070
Materials	Zinc-nickel plated steel	•	•	•	•	•	•	•	•	•	•	•	•	•	•	•
	Electropolished 316 stainless steel	•	•	•	•	•	•	•	•	•	•	•	•	•	•	•
	360 brass	•	•	•	•							•	•			
Connections	1/8" NPT	•	•	•	•											
	1/4" NPT	•	•	•	•			•	•	•	•	•	•	•	•	•
	3/8" NPT							•	•							
	7/16"-20 UNF 2B	•	•	•	•			•								
	1/2" NPT					•	•	•	•	•	•	•	•	•	•	•
	1/2" NPT male - 1/4" NPT female								•							
	9/16"-18 UNF 2B	•	•	•	•											
	3/4" NPT							•	•							
	3/4" NPT male - 1/2" NPT female					•	•									
	1" NPT							•	•							
	1-1/4" NPT							•	•							
	1-1/2" NPT							•	•							
Valve Type	Male-Male	•	•	•	•											
	Male-Female	•	•	•	•	•	•	•	•	•	•			•	•	•
	Female-Female	•	•	•	•			•	•	•	•			•	•	•
	Female-Male													•	•	•
	Male-Male Angle	•	•	•	•											
	Male-Female Angle	•	•	•	•			•								
	Female-Female Angle							•								
	Male											•	•			
	Male-Female Extended													•	•	•
	Female-Male Extended													•	•	•
	Female-Female Extended													•	•	•
	Flange-Female															
	Flange-Flange															
Pressure Ratings	3,000 psi			•	•							•	•			
	6,000 psi	•	•	•	•		•		•		•	•	•		•	
	10,000 psi	•	•			•		•		•				•		•
Orifice Size	0.141"															
	0.156"															
	0.172"	•	•	•	•											
	0.187"					•	•	•	•	•	•			•	•	•
	0.375"															
	0.438"							•	•							
Flow Coefficient (Cv)	0.38															
	0.42	•	•	•	•											
	0.44					•		•		•				•		•
	0.64						•									
	0.76								•		•				•	
	2.70							•								
	3.00															
	4.00								•							
Stem Seal	FKM	•	•	•	•	•	•	•	•	•	•	•	•	•	•	•
	PTFE	•	•	•	•	•	•	•	•	•	•	•	•	•	•	•
	EPDM	•	•	•	•	•	•	•	•	•	•	•	•	•	•	•
	FFKM	•	•	•	•	•	•	•	•	•	•	•	•	•	•	•
	NBR	•	•	•	•	•	•	•	•	•	•	•	•	•	•	•
Packings	PTFE	•	•	•	•	•	•	•	•	•	•	•	•	•	•	•
	Grafoil®	•	•			•		•		•		•		•		•
Soft Seats	Delrin®						•		•		•				•	
	PEEK						•		•		•				•	
	PCTFE						•		•		•				•	
Stem Tips	Rotating (316 stainless)	•	•			•	•	•	•	•	•	•		•	•	•
	Delrin®			•	•								•		•	
	Non-rotating (316 stainless)	•	•			•	•	•	•	•	•	•	•	•	•	•
	Ball (440C stainless)	•	•			•		•		•		•		•		•
	Ball (carbide)	•	•			•		•		•		•		•		•
	Ball (ceramic)	•	•			•		•		•		•		•		•
	Ball (Monel)	•	•			•		•		•		•		•		•
	Regulating hard	•	•			•		•		•				•		•
	PTCFE			•	•								•			
	PEEK			•	•								•			
	Regulating Delrin®			•	•											
	Regulating PTCFE			•	•											
	Regulating PEEK			•	•											
Handles	1-13/16" Mini "T" - HL1	•	•	•	•	•								•	•	•
	2-1/2" "T" - HL2	•	•			•	•	•	•	•	•	•		•	•	•
	1" Round Knurled - HL3	•	•	•	•							•	•	•	•	•
	1-3/8" Phenolic - HL4	•	•			•	•	•	•	•	•	•		•	•	•
	1-3/4" Phenolic - HL5	•	•			•	•	•	•	•	•	•		•	•	•
	1-3/8" Mini "T" - HL7											•	•			
	2-3/8" Phenolic - HL9							•	•							
Panel Mountings	1 Nut	•	•	•	•	•	•	•	•	•	•					
	2 Nuts	•	•	•	•	•	•	•	•	•	•					

NOSHOK Manifold Valves Reference Chart (Continued on next page)

		Static Pressure Block & Bleed		Liquid Level		Static Pressure Narrow Block & Bleed				Static Pressure Mini Block & Bleed	
		Hard Seat	Soft Seat	Hard Seat	Soft Seat	Hard Seat		Soft Seat		Hard Seat	Soft Tip
	SERIES	2000	2100	2020	2120	200002	200402	210002	210402	2602	2702
Materials	Zinc-nickel plated steel	•	•	•	•	•	•	•	•	•	•
	Electropolished 316 stainless steel	•	•	•	•	•	•	•	•	•	•
	360 brass										
Connections	1/8" NPT									•	•
	1/4" NPT	•	•							•	•
	3/8" NPT										
	7/16"-20 UNF 2B										
	1/2" NPT	•	•	•	•	•	•	•	•		
	1/2" NPT male - 1/4" NPT female										
	9/16"-18 UNF 2B										
	3/4" NPT										
	3/4" NPT male - 1/2" NPT female										
	1" NPT										
	1-1/4" NPT										
	1-1/2" NPT										
Valve Type	Male-Male										
	Male-Female										
	Female-Female	•	•							•	•
	Female-Male										
	Male-Male Angle										
	Male-Female Angle										
	Female-Female Angle										
	Male										
	Male-Female Extended										
	Female-Male Extended										
	Female-Female Extended										
	Flange-Female	•	•	•	•	•	•	•	•		
	Flange-Flange	•	•	•	•	•	•	•	•		
Pressure Ratings	3,000 psi										
	6,000 psi		•		•			•	•		•
	10,000 psi	•		•		•	•			•	
Orifice Size	0.141"									•	•
	0.156"										
	0.172"										
	0.187"	•	•	•	•	•	•	•	•		
	0.375"										
	0.438"										
Flow Coefficient (Cv)	0.38									•	•
	0.42										
	0.44	•		•		•	•				
	0.64										
	0.76		•		•			•	•		
	2.70										
	3.00										
	4.00										
Stem Seal	FKM	•	•	•	•	•	•	•	•	•	•
	PTFE	•	•	•	•	•	•	•	•	•	•
	EPDM	•	•	•	•	•	•	•	•	•	•
	FFKM	•	•	•	•	•	•	•	•	•	•
	NBR	•	•	•	•	•	•	•	•	•	•
Packings	PTFE	•	•	•	•	•	•	•	•	•	•
	Grafoil®	•		•		•	•			•	
Soft Seats	Delrin®		•		•			•	•		
	PEEK		•		•			•	•		
	PCTFE		•		•			•	•		
Stem Tips	Rotating (316 stainless)	•	•	•	•	•	•	•	•	•	
	Delrin®										•
	Non-rotating (316 stainless)		•	•	•	•	•	•	•	•	•
	Ball (440C stainless)	•		•		•	•			•	
	Ball (carbide)	•		•		•	•			•	
	Ball (ceramic)	•		•		•	•			•	
	Ball (Monel)	•		•		•	•			•	
	Regulating hard	•		•		•	•			•	
	PTCFE										•
	PEEK										•
	Regulating Delrin®										•
	Regulating PTCFE										•
	Regulating PEEK										•
Handles	1-13/16" Mini "T" - HL1	•	•	•	•	•	•	•	•		
	2-1/2" "T" - HL2	•	•	•	•	•	•	•	•		
	1" Round Knurled - HL3	•	•	•	•	•	•	•	•	•	•
	1-3/8" Phenolic - HL4	•	•	•	•	•	•	•	•		
	1-3/4" Phenolic - HL5	•	•	•	•	•	•	•	•		
	1-3/8" Mini "T" - HL7									•	•
	2-3/8" Phenolic - HL9										

NOSHOK Manifold Valves Reference Chart

		Static Pressure Block & Bleed				Meter Manifold	Differential Pressure					Natural Gas		
		Hard Seat		Soft Tip		Soft Seat	Hard Seat		Soft Seat		Soft Tip	Hard Seat	Soft Seat/Tip	
	SERIES	2603	2604	2703	2704	2180	3010	3610	3110	3510	3710	5030	5130	5530
Materials	Zinc-nickel plated steel	•	•	•	•	•	•	•	•	•	•	•	•	•
	Electropolished 316 stainless steel	•	•	•	•	•	•	•	•	•	•	•	•	•
	360 brass													
Connections	1/8" NPT													
	1/4" NPT					•		•			•			
	3/8" NPT	•		•										
	7/16"-20 UNF 2B													
	1/2" NPT		•		•		•		•	•		•	•	•
	1/2" NPT male - 1/4" NPT female													
	9/16"-18 UNF 2B													
	3/4" NPT													
	3/4" NPT male - 1/2" NPT female													
	1" NPT													
	1-1/4" NPT													
	1-1/2" NPT													
Valve Type	Male-Male													
	Male-Female													
	Female-Female	•	•	•	•	•	•	•	•	•	•	•	•	•
	Female-Male													
	Male-Male Angle													
	Male-Female Angle													
	Female-Female Angle													
	Male													
	Male-Female Extended													
	Female-Male Extended													
	Female-Female Extended													
	Flange-Female						•		•	•		•	•	•
	Flange-Flange						•		•	•		•	•	•
Pressure Ratings	3,000 psi													
	6,000 psi			•	•	•			•	•	•		•	•
	10,000 psi	•	•				•	•				•		
Orifice Size	0.141"							•			•			
	0.156"	•	•	•	•									
	0.172"													
	0.187"					•	•		•			•	•	
	0.375"									•				•
	0.438"													
Flow Coefficient (Cv)	0.38													
	0.42													
	0.44	•	•	•	•		•	•			•	•		
	0.64													
	0.76					•			•				•	
	2.70													
	3.00									•				•
	4.00													
Stem Seal	FKM	•	•	•	•	•	•	•	•	•	•	•	•	•
	PTFE	•	•	•	•	•	•	•	•	•	•	•	•	•
	EPDM	•	•	•	•	•	•	•	•	•	•	•	•	•
	FFKM	•	•	•	•	•	•	•	•	•	•	•	•	•
	NBR	•	•	•	•	•	•	•	•	•	•	•	•	•
Packings	PTFE	•	•	•	•	•	•	•	•		•	•	•	
	Grafoil®	•	•				•	•				•		
Soft Seats	Delrin®					•			•	•			•	•
	PEEK					•			•	•			•	•
	PCTFE					•			•	•			•	•
Stem Tips	Rotating (316 stainless)	•	•			•	•	•	•	•		•	•	•
	Delrin®			•	•	•					•		•	•
	Non-rotating (316 stainless)	•	•			•	•		•			•	•	
	Ball (440C stainless)	•	•				•	•				•		
	Ball (carbide)	•	•				•	•				•		
	Ball (ceramic)	•	•				•	•				•		
	Ball (Monel)	•	•				•	•				•		
	Regulating hard	•	•				•	•				•		
	PTCFE			•	•						•		•	
	PEEK			•	•						•		•	
	Regulating Delrin®			•	•						•		•	
	Regulating PTCFE			•	•						•		•	
	Regulating PEEK			•	•						•		•	
Handles	1-13/16" Mini "T" - HL1	•	•	•	•		•	•	•		•	•	•	
	2-1/2" "T" - HL2	•	•	•	•	•	•	•	•	•	•	•	•	
	1" Round Knurled - HL3	•	•	•	•	•	•	•	•	•	•	•	•	•
	1-3/8" Phenolic - HL4	•	•	•	•	•	•	•	•	•	•	•	•	•
	1-3/4" Phenolic - HL5	•	•	•	•	•	•	•	•	•	•	•	•	
	1-3/8" Mini "T" - HL7											•	•	•
	2-3/8" Phenolic - HL9													

Tips for Selecting the Best NOSHOK Valve for Your Application

NOSHOK's wide range of needle and manifold valves cover a vast majority of industrial applications, but knowing which needle or manifold valve to select may be a daunting task. As all NOSHOK valves are not created equal, the following are general tips one should consider when deciding which NOSHOK valve is best suited for their application.

1. System Parameters
Knowing the system parameters for which you want to install a NOSHOK valve is critical. What media, gas or liquid, will flow through the system? Is the media corrosive? What is the viscosity? At what temperatures and pressures will the NOSHOK valves be exposed? What is the flow rate at peak efficiency?

2. Function
Does the valve need to meter in-line flow and/or direct media throughout multiple outlets? Will the system need to be bled without disrupting permanent piping installations? Will any other instrumentation be installed to measure system pressure or temperature? Is physical space a concern?

3. Media Compatibility
For those corrosive medias, knowing how they affect certain materials will begin narrowing down the valve options. NOSHOK valve bodies come standard in 360 brass, zinc-nickel plated steel, and electropolished 316 stainless steel. Standard stem o-rings are FKM and PTFE. Delrin® soft tips and seats are also standard on certain models. Other body and sealing materials are available to accommodate any media.

4. Flow
Every NOSHOK valve is rated with a flow coefficient, CV, which identifies the relationship between rate of flow and the pressure drop across the valve's orifice. Understanding the flow coefficient of your system will aid in deciding the proper size NOSHOK valve required.

5. Installation Configuration
NOSHOK valves come in a variety of shapes and sizes that are guaranteed to fit in almost every system application. Whether a male-male, male-female, female-female, in-line or angled configuration is needed, there is a NOSHOK valve suited for the application.

Answering the aforementioned questions will help you select which NOSHOK needle or manifold valve is best for your application. NOSHOK's Customer Support Team is also available at 440.243.0888 should you need further assistance.

NOTES

**TO DOWNLOAD OR ORDER CATALOGS,
VISIT WWW.NOSHOK.COM**

Quality Policy

NOSHOK is
committed to providing
a high degree of value and continually
improving processes to improve customer
satisfaction by focusing on customer
requirements for the design, manufacture
and distribution of pressure, temperature,
and force measurement instruments
along with needle and
manifold valves.

All from world class technology.

Combined with real-world stamina.

The highest value with the industry's best warranty.

And all from a company with a 45+ year record of customer satisfaction.

All from your Single Source Instrumentation Company.

The Instrumentation Company

NOSHOK INCORPORATED

Corporate Headquarters
1010 West Bagley Road
Berea, Ohio 44017
Ph: 440.243.0888
Fax: 440.243.3472
E-mail: noshok@noshok.com
Web: www.noshok.com

ISO 9001:2008 REGISTERED

Mixed Sources
Product group from well-managed forests, controlled sources and recycled wood or fibre
www.fsc.org Cert no. SW-COC-002929
© 1996 Forest Stewardship Council

Catalog NK12VPS